General Information

GENERAL

CHECKING STEERING WHEEL FREE PLAY

1. Start the engine with the steering wheel in the straight ahead position, apply a force of 5 N (1.1 lb) to the steering wheel in the peripheral direction.
2. Measure the play at the circumference of the steering wheel.

Standard value :
Steering wheel free play : 0 ~ 30 mm (0 ~ 1.1 in)

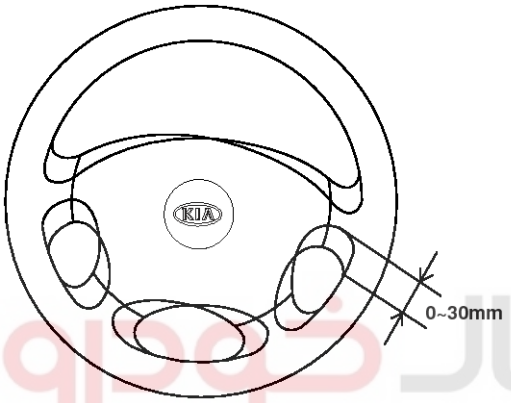

APIE101A

3. If the play exceeds the standard value, inspect the connection between the steering shaft and tie rod ends.

CHECKING STEERING ANGLE

1. Place the front wheel on a turning radius gauge and measure the steering angle.

Standard value :
Wheel angle
Inner wheel : 37.15° ± 1°30'
Outer wheel : 31.8°

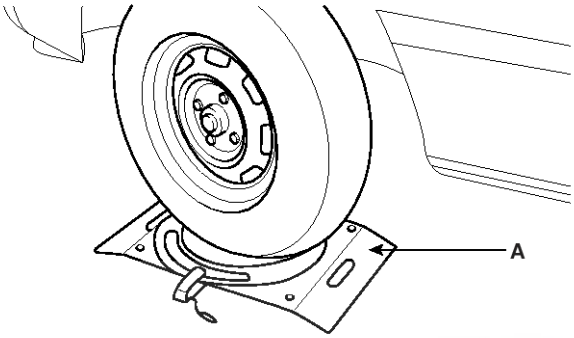

APIE101B

2. If the measured value is not within the standard value, adjust the linkage.

CHECKING THE TIE ROD END BALL JOINT STARTING TORQUE

1. Disconnect the tie rod(A) and knuckle(B) by using the special tool (09568-34000).

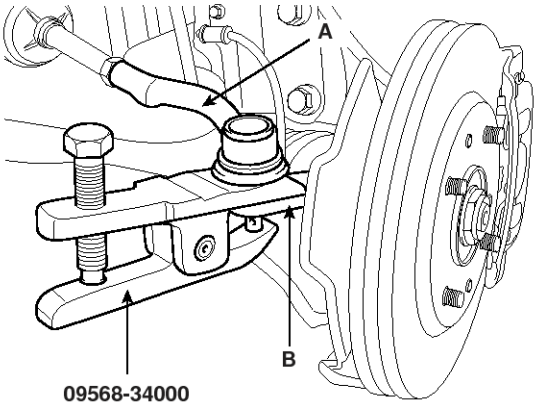

APIE101C

2. Shake the ball joint stud several times to check for looseness.

3. Mount the nuts on the ball joint, and then measure the ball joint starting torque.

Standard value :
0.5 ~ 2.5 Nm (0.05 ~ 0.25 kgf·m, 0.36~1.78 lbf·ft)

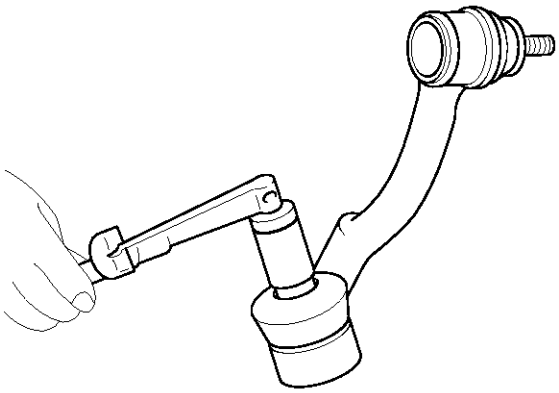

APIE101D

4. If the starting torque exceeds the upper limit of the standard value, replace the tie rod end.
5. Even if the starting torque is below the lower limit of the standard value, check the play of the ball joint and replace if nece ssary.

CHECKING STATIONARY STEERING EFFORT

1. Place the vehicle on a level surface and place the steering wheel in the straight ahead position.
2. Increase the engine speed to 1000 ± 100 rpm.

NOTICE
After checking, reset the engine speed to the standard value (idling speed).

3. Measure the turning force with a spring scale(A) by turning the steering wheel(B) clockwise and counterclockwise one and a quarter turns.

Standard value :
Stationary steering effort :
29 N (3.0 kg, 6.5lbs) or less

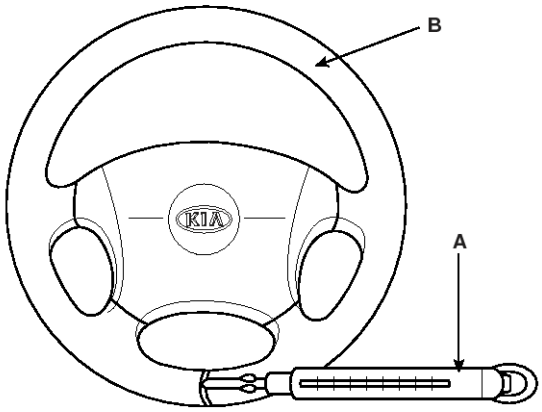

APIE101E

4. Check that there is no sudden change of force while turning the steering wheel.
5. If the stationary steering effort is excessive, check and adjust the following points.
   1) Damage or cracks on the dust cover of the lower arm ball joint and tie rod end.
   2) Pinion preload of the steering gear box and starting torque of the tie rod end ball joint.
   3) Starting torque of the ball joint.

CHECKING STEERING WHEEL RETURN

1. The force required to turn the steering wheel and the wheel return should be the same for both left and right in case of moderate or sharp turns.
2. When the steering wheel is turned 90˚ and held for a couple of seconds while the vehicle is being driven at 35kph, the steering wheel should return 70˚ or more.

NOTICE
If the steering wheel is turned very quickly, steering may be momentarily difficult. This is not a malfunction because the oil pump output will be somewhatdecreased.

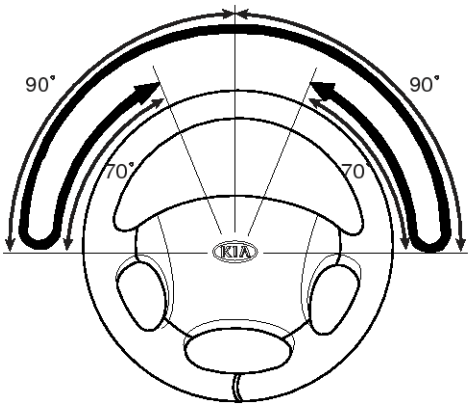

APIE101F

CHECKING POWER STEERING BELT TENSION

1. Press the V belt, applying a pressure of 98N (10kg, 22lb) at the specified point and measure the deflection to confirm that it is within the standardvalue.

Standard value :
New belt : 8.8 ~ 11.0 mm
Used belt : 12.5 ~ 14.3 mm

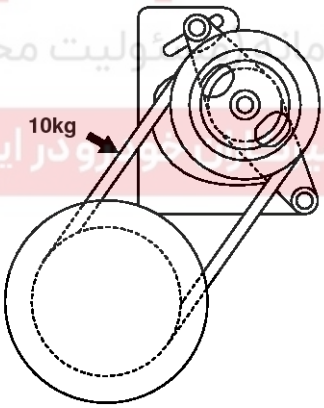

LPIE101G

2. If the belt deflection is beyond the standard value, adjust the belt tension as follows.
   1) Loosen the bolt adjusting(A) the power steering "V"belt tension.

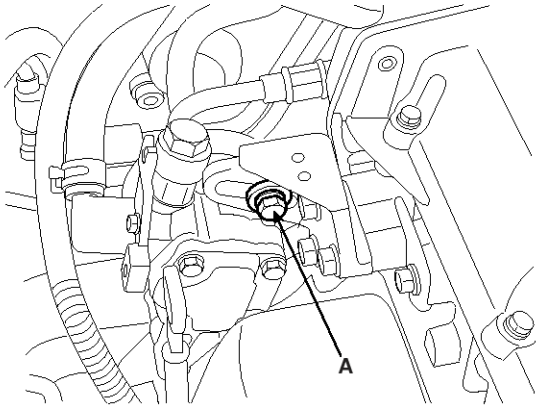

LPIE101H

   2) Put a bar(A) or equivalent, between the bracket(B) and the oil pump(C) and adjust the tension so that the belt deflection is within the standard value.

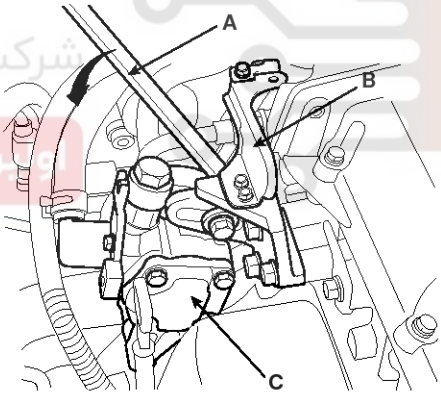

LPIE101I

   3) Tighten the bolt adjusting the power steering "V"belt tension.
   4) Check the belt deflection and adjust it again if necessary.

⚠CAUTION
After turning the V belt in the no rmal rotation direction more than once, recheck the belt deflection.

CHECKING POWER STEERING FLUID LEVEL

1. Position the vehicle on a level surface.
2. Start the engine. With the vehicle kept stationary, turn the steering wheel several times continuously to raise the fluid temperature to 50 - 60˚C(122 to 140˚F).
3. With the engine at idle, turn the steering wheel fully clockwise and counterclockwise several times.
4. Make sure there is no foaming or cloudiness in the reservoir fluid.
5. Stop the engine to chec k for any difference in fluid level between a stationary and a running engine.

NOTICE

1. *If the fluid level varies 5 mm (0.2 in.) or more, bleed the system again.*
2. *If the fluid level suddenly rises after stopping the engine, further bleeding is required.*
3. *Incomplete bleeding will produce a chattering sound in the pump and noise in the flow control valve, and lead to decreased durabilityof the pump.*

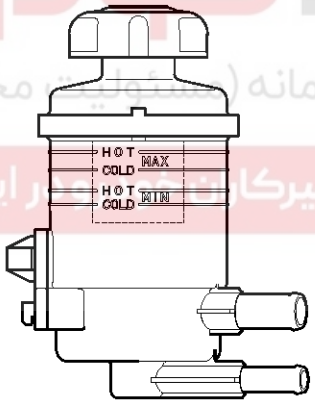

APIE101G

REPLACING POW ER STEERING FLUID

1. Jack up the front wheels of the car and support them with jackstands.
2. Disconnect the return hose from the oil reservoir and plug the oil reservoir.
3. Connect a hose to the disconnected return hose, and drain the oil into a container.
4. Disconnect the high-tension cables and ignition coils.

   While operating the starter motor intermittently, turn the steering wheel all the way to the left and then to the right several times to drain the fluid.
5. Connect the return hose and fix it with a cl ip.
6. Fill the power steering fluid reservoir with the specified fluid.

PSF-3 : 0.75~0.8 lit.

7. Start the engine.

   Check for fluid leaks from the hose, then stop the engine.
8. Pour the fluid into the bottom of the oil filter in the power steering fluid reservoir.
9. Bleed the air.

AIR BLEEDING

1. Fill the power steering fluid reservoir up to the "MAX" position with specified fluid.
2. Jack up the front wheels.
3. Disconnect the ignition coil high tension cable, and then, while operating the starter motor intermittently (for 15 to 20 seconds), turn the steering wheel all the way to the left and then to the right five or six times.

   NOTICE

   1. *When bleeding fluid, replenish with the fluid so that the level does not fall below the bottom of the filter.*
   2. *If air bleeding is done while the vehicle is idling, the air will be broken up and absorbed into the fluid. Be sure to do the bleeding only while cranking.*
4. Connect the high tension cable , and then start the engine (idling).
5. Turn the steering wheel to the left and then to the right, until there are no air bubbles in the oil reservoir.

   NOTICE

   Do not hold the steering wheel turned all the way to either side for more than ten seconds.
6. Confirm that the fluid is not milky and that the level is between "MAX" and "MIN" mark on the reservoir.
7. Check that there is a little change in the fluid level when the steering wheel is turned left and right.

   NOTICE

   **1. If the fluid level varies 5mm (0.2 in.) or more, bleed the system again.*

   **2. If the fluid level suddenly rises after stopping the engine, further bleeding is required.*

   **3. Incomplete bleeding will produce a chattering sound in the pump and noise in the flow control valve, and lead to decreased durability of the pump.*

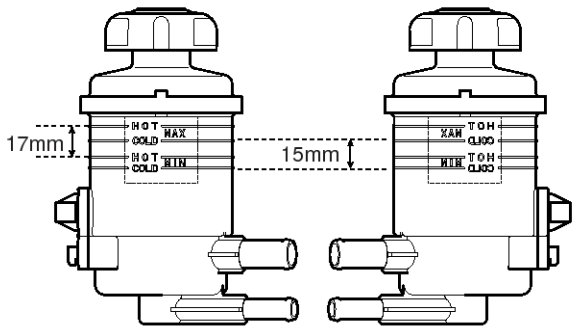

APIE101I

OIL PUMP PRESSURE TEST

1. Disconnect the pressure hose(B) from the pump(A). Connect the special tool between the pump and the pressure hose as illustrated.
2. Bleed the air, and then start the engine and turn the steering wheel several times, measure the fluid temperature by Temperature gauge so that the fluid temperature can rise to approximately 50˚C (122˚F).
3. Increase the engine speed to 1,000 rpm.
4. Close the shut-off valve of the special tool and measure the fluid pressure to confirm that it is within the standard value range.

Standard value :
Oil pump pressure
Relief pressure :
2.0(I4), 2.7(V6) :
8.6 ~ 9.1 MPa (88 ~ 93 kg.cm², 1251 ~ 1322 psi)
2.0(D-ENG) :
9.1~9.6 MPa (93 ~ 98 kg.cm², 1322 ~ 1393 psi)

⚠CAUTION
Do not keep the shut-off valve on the pressure gauge closed for more than ten seconds.

5. Remove the special tools, and tighten the pressure hose(B) against the oil pump (A) using the specified torque.

Tightening torque :
65 ~ 75 Nm (6.5 ~ 7.5 kgf·m, 47.9 ~ 54.2 lbf·ft)

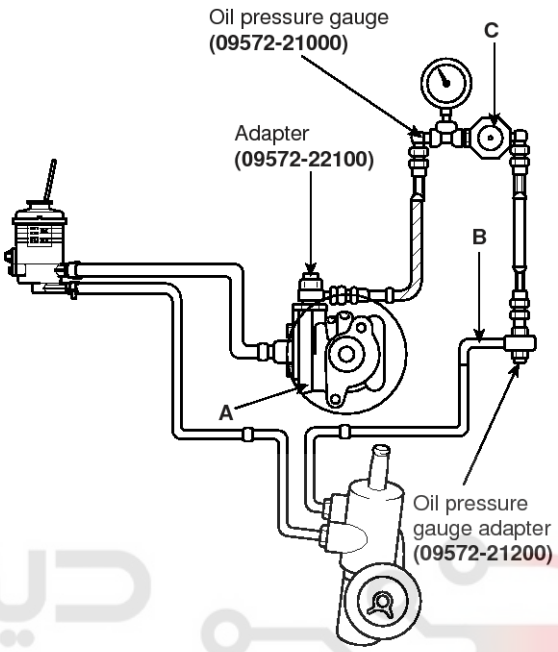

LPIE101J

6. Air bleed the system. (see page ST-11)

SPECIAL TOOLS

Tool (Number and name)	Illustration	Use
09222-32100 Valve stem oil seal installer		Installing the pinion gear bearing
09432-21600 Bearing installer		Installing the pinion gear bearing
09434-14200 Counter shaft bearing installer		Installing the gear box oil seal.
09561-11002 Steering wheel puller	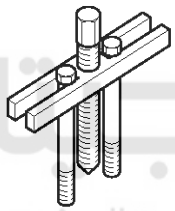	Removing the steering wheel.
09565-11100 Prelo ad socket		Measuring the mainshaft preload.
09555-21000 Bar	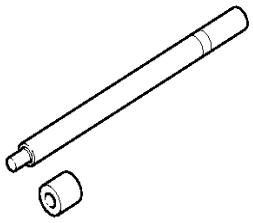	Removing & installing the oil seal.

Tool (Number and name)	Illustration	Use
09568-34000 Ball joint puller	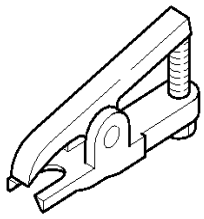	Separating the tie rod end ball joint.
09572-21000 Oil pressure gauge	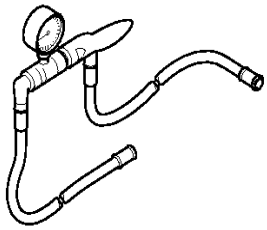	Measuring the power steering oil pressure (use with 09572-21200, 09572-22100)
09572-21200 Oil pressure gauge adapter	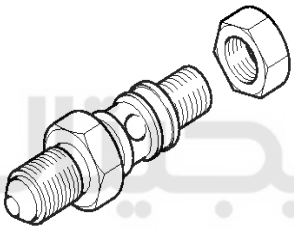	Measuring the power steering oil pressure (use with 09572-21000, 09572-22100)
09572-22100 Oil pressure gauge adapter	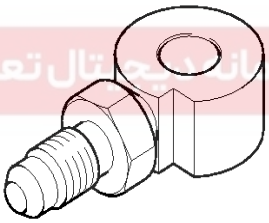	Measuring the power steering oil pressure (use with 09572-21000, 09572-21200)
09573-21000 Oil seal installer gauge	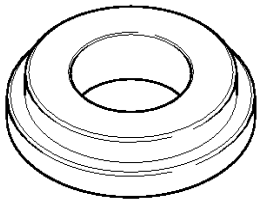	Installing the back-up washer and oil seal. (use with 09573-21100, 09573-21200, 09517-1 1000, 09555-21000)
09573-21100 Oil seal installer		Installing the back-up washer and oil seal. (use with 09573-21000, 09573-21200, 09555-2 1000)

Tool (Number and name)	Illustration	Use
09573-21200 Oil seal guide	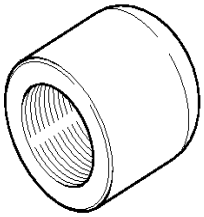	1. Removing the gear box oil seal and back washer (use with 09573-21000) 2. Installing the gear box oil seal and back washer (use with 09555-21000, 09573-21000)

TROUBLESHOOTING

Symptom	Probable cause	Remedy
Excessive play in steering	Loose yoke plug Loose steering gear mounting bolts Loose or worn tie rod end	Retighten Retighten Retighten or replace as necessary
Steering wheel operation is not smooth (Insufficient power assi-st)	V-belt slippage Damaged V-belt Low fluid level Air in the fluid Twisted or damaged hoses Insufficient oil pump pressure Sticky flow control valve Excessive internal oil pump leakage Excessive oil leaks from rack and pinion in gear box Distorted or damaged gear box or valve body se-als	 Readjust Replace Replenish Bleed air Correct the routing or replace Repair or replace the oil pump Replace Replace the damaged parts Replace the damaged parts Replace
Steering wheel does not return properly	Ex cessive turning resistance of tierod end Yoke plug excessively tight Tie rod and/or ball joint cannot turn smoothly Loose mounting of gear box mounting bracket Worn steering shaft joint and/or body grommet Distorted rack Damaged pinion bearing Twisted or damaged hoses Damaged oil pressure control valve Damaged oil pump input shaft bearing	Replace Adjust Replace Retighten Correct or replace Replace Replace Reposition or replace Replace Replace
Noise	**Hissing Noise in Steering Gear** There is some noise with all power steering systems. Oe of the most common is a his-sing sound when the steering wheel is turned and the car is not moving. This noise w-ill be most evident when turning the wheel while the brakes are being applied. There i-s no relationship between this noise and steering performance. Do not replace the va-lve unless the "hissing" noise becomes extreme. A replaced valve will also make a sli-ght noise, andis not always a solution for the condition	
Rattling or chucking noise in the rack and pinion	Interference with hoses from vehicle body Loose gear box bracket Loose tie rod end and/or ball joint Worn tie rod and/or ball joint	Reposition Retighten Retighten Replace
Noise in the oil pump	Low fluid level Air in the fluid Loose pump mounting bolts	Replenish Bleed air Retighten

SPECIFICATIONS

Items	Specifications
Steering gear type	Rack and pinion
Rack stroke	140 ± 1 mm (lock to lock : 3.06 turns)
Power steering pump type	Vane type
Oil pump displacement	
2.0(I4), 2.0(D-ENG)	9.6cc/rev. MAX. (0.59 in³/rev. MAX.)
2.7(V6)	10.5cc/rev. MAX. (0.64 in³/rev. MAX.)

SERVICE STANDARD

Items	Specifications
Steering wheel free play	0 ~ 30 mm (0 ~ 1.1 in)
Steering angle	
Inner wheel	37.15° ± 1°30′
Outer wheel	31.8°
Stationary steering effort	29 N (3.0 kg, 6.5 lbs) or less
Belt deflection [under 98N (10kg, 22lb) force]	
New belt	8.8 ~ 11.0 mm
Use belt	12.5 ~ 14.3 mm
Oil pump relief pressure	
2.0 (I4), 2.7 (V6)	8.6 ~ 9.1 MPa (88 ~ 93 kg/cm², 1251 ~ 1322 psi)
2.0 (D-ENG)	9.1 ~ 9.6 MPa (93 ~ 98 kg/cm², 1322 ~ 1393 psi)
Total pinion preload	0.6 ~ 1.3 Nm (0.06 ~ 0.13 kgf·m, 5.2 ~ 11.3 lbf·in)
Tie rod swing resistance	2 ~ 5 Nm (0.2 ~ 0.5 kgf·m, 1.4 ~ 3.6 lbf·ft)
Ball joint starting torque	0.5 ~ 2.5 Nm (0.05 ~ 0.25 kgf·m, 0.36 ~ 1.78 lbf·ft)

TIGHTENING TORQUE

Item	Nm	kgf·m	lbf·ft
Power steering column and shaft			
Steering column and shaft mounting bolt	13 ~ 18	1.3 ~ 1.8	9.6 ~ 13.3
Power steering wheel lock nut	35 ~ 45	3.5 ~ 4.5	25.3 ~ 32.5
Pinion gear and joint assembly	15 ~ 20	1.5 ~ 2	10.8 ~ 14.8
Steering column shaft and universal joint assembly	15 ~ 20	1.5 ~ 2	10.8 ~ 14.8
Power steering gear box			
Gear box mounting bolt	60 ~ 80	6 ~ 8	44 ~ 59
Tie rod end ball joint and knuckle arm mounting nut	45 ~ 60	4.5 ~ 6	32.5 ~ 43.4
Feed tube to gear box	10 ~ 16	1 ~ 1.6	7.4 ~ 11.8
Gear box to valve body	20 ~ 30	2 ~ 3	14.8 ~ 21.7
Yoke plug lock nut	50 ~ 70	5 ~ 7	37 ~ 50
Power steering oil pump			
Pressure hose to oil pump	65 ~ 75	6.5 ~ 7.5	47.9 ~ 54.2
Oil pump adjusting bolt	35 ~ 50	3.5 ~ 5	25.3 ~ 37
Oil pump mounting bolt			
2.0 (D-ENG)	17 ~ 26	1.7 ~ 2.6	12.3 ~ 18.8
2.0 (I4), 2.7 (V6)	35 ~ 50	3.5 ~ 5	25.8 ~ 37
Oil pump bracket mounting bolt	35 ~ 50	3.5 ~ 5	25.8 ~ 37
Power steering hose			
Power steering reservoir mounting bolt	17 ~ 26	1.7 ~ 2.6	12.3 ~ 18.8
Power steering hose mounting bolt	4 ~ 6	0.4 ~ 0.6	3.0 ~ 4.0
Power steering tube mounting bolt	4 ~ 6	0.4 ~ 0.6	3.0 ~ 4.0

LUBRICANTS

Item	Recommended lubricant	Quantity
Bearing of steering shaft	ALVANIA #2 OR #3 (KEUK DONG SHELL, KOREA)	As required
Ball joint of tie rod end	SHOWA SUNLIGHT MB-2 OR equivalent	4 g
Steering gear housing	ONE-LUBER RP GREASE (KYODOYUSHI, JAPAN)	As required
Inner ball joint of gear box	LONG TIME PD2 (OPTIMOL, GERMAN)	As required
Contact area of gear box bellows & tie rod	SILICON GREASE (SPEC NO : MS511-41)	As required
Power steering fluid	PSF-3	0.75 ~ 0.8 liter (0.79 ~ 0.84 qts.)

Steering Column & Shaft ST-13

Steering Column & Shaft

Steering Column-Shaft

COMPONENTS

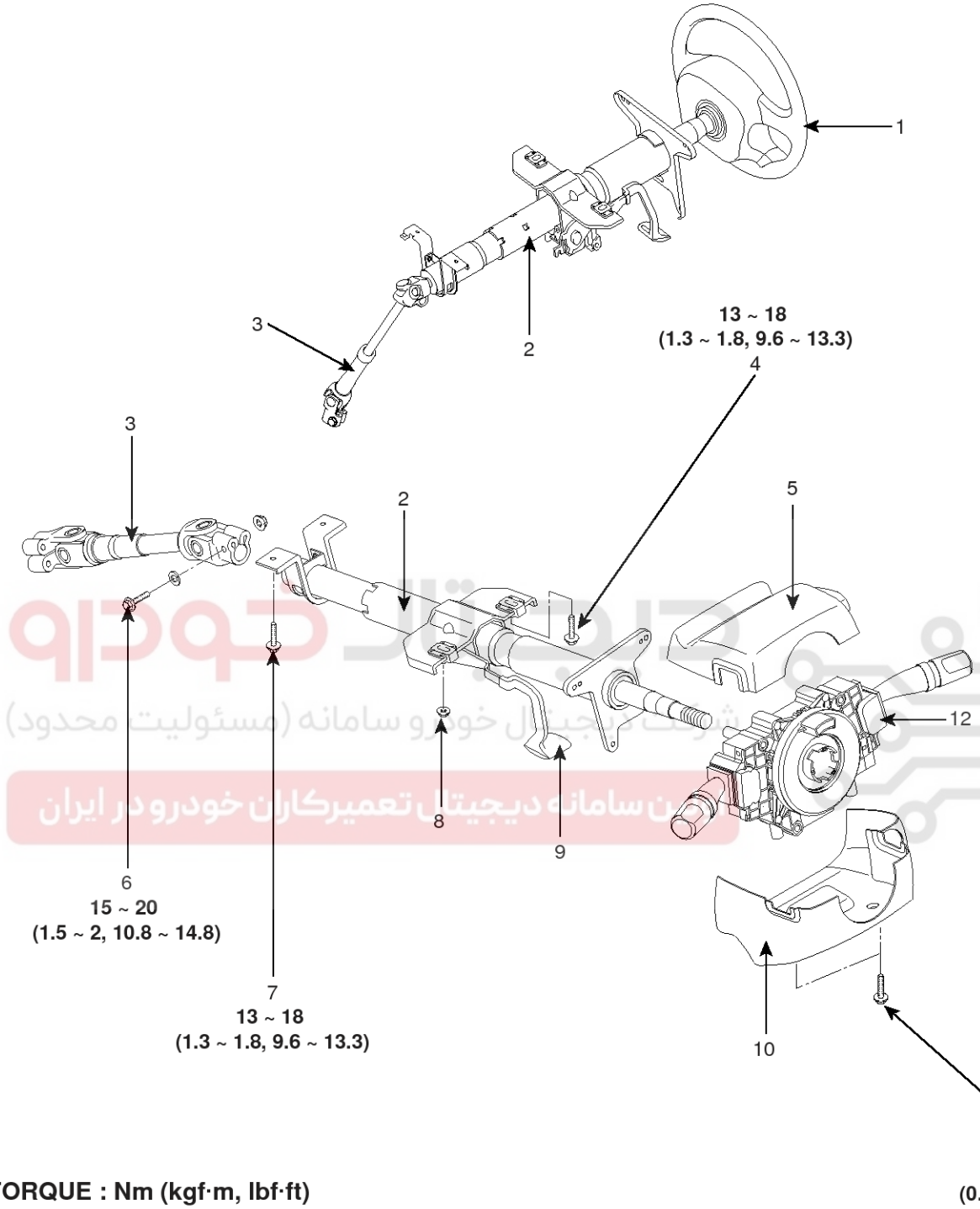

TORQUE : Nm (kgf·m, lbf·ft)

1. Steering wheel
2. Steering column shaft assembly
3. Universal joint assembly
4. Steering column shaft mounting bolt
5. Steering column upper shroud
6. Universal joint mounting bolt
7. Steering column shaft mounting bolt
8. Steering column shaft mounting nut
9. Tilt lever
10. Steering column lower shoud
11. Steering column lower shroud mounting bolt
12. Multifunction switch

LPIE102A

REMOVAL

1. Disconnect the negative (-) terminal(A) from the battery.

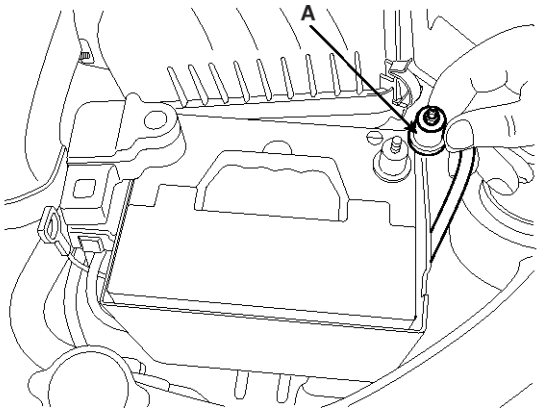

APIE102B

2. Take away the bolts (A) in the illustration, and then remove the driver's airbag module(B).

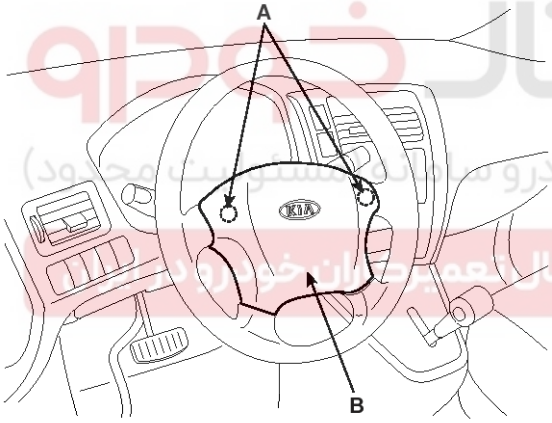

APIE102C

3. Remove the steering wheel lock nut(A).

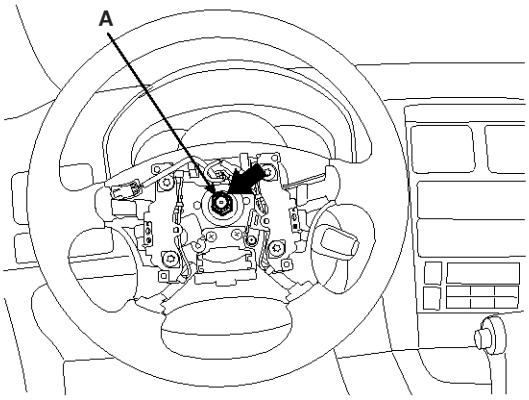

APIE102D

4. After aligning the marks on the steering shaft and wheel(A), remove the steering wheel using the special tool (09561-11002).

NOTICE

Do not hammer on the steering wheel to remove it: it may damage the steering column.

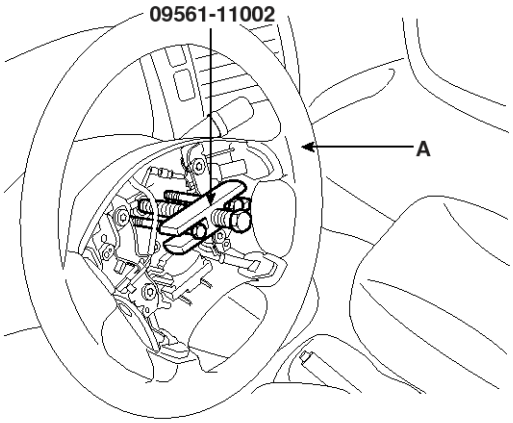

APIE102E

5. Remove the steering column upper(A) and lower shrouds(B).

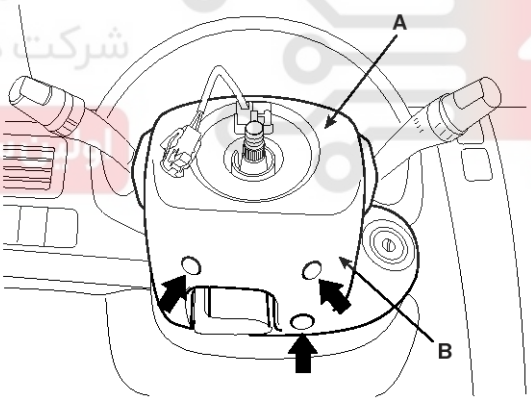

APIE102F

6. Disconnect two tightening bolt(A) and remove the lower crash pad(B).

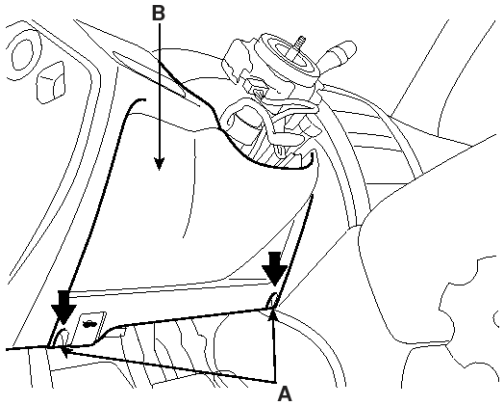

APIE102G

7. Remove the connectors of the multifunction switch(A).

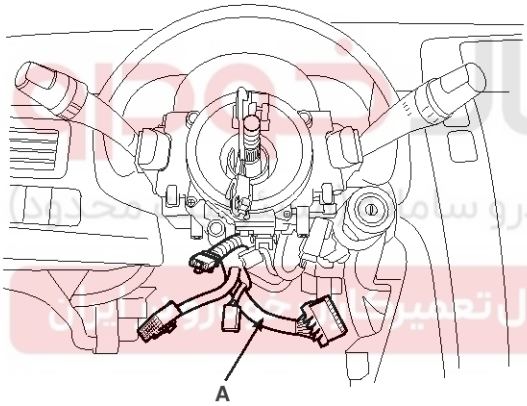

APIE102H

8. After removing three bolts(A) in the illustration, remove the multifunction switch assembly(B).

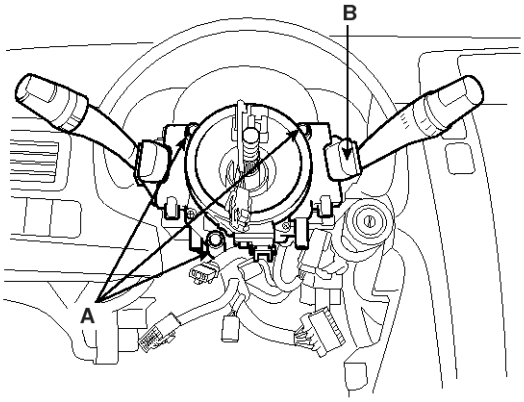

APIE102I

9. Remove the bolts connecting the steering column shaft(A) and the universal joint(B) as shown in the illustration.

⚠CAUTION
Keep the neutral-range to prevent the damage of the clock spring inner cable when you handlethe steering wheel.

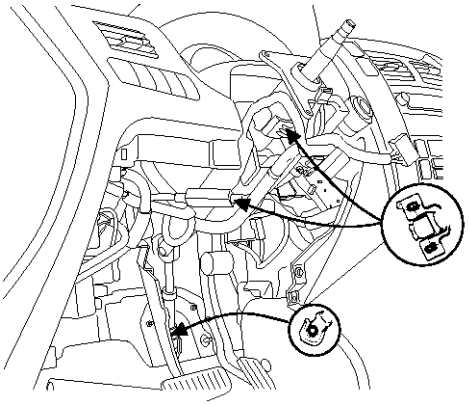

APIE102J

10. After removing the mounting bolts and nuts on the steering column and shaft assembly, remove the steering column and shaft assembly(A).

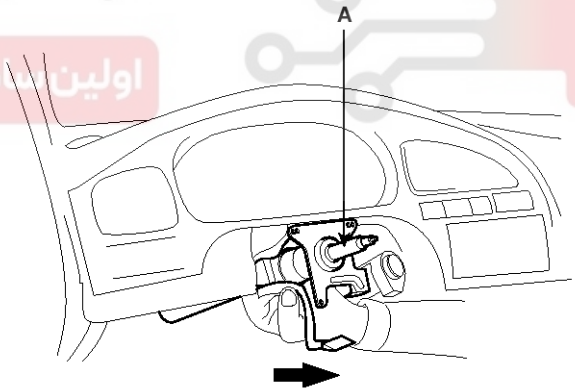

LPIE102K

INSTALLATION

Assembly is the reverse of removal.

⚠CAUTION
When installing the clock spring, refer the RT group to prevent the damage of clock spring inner cable.

DISASSEMBLY AND REASSEMBLY

KEY LOCK ASSEMBLY

1. If it is necessary to remove the key lock assembly(A), use a punch to make a groove on the head of the special bolt(B), and then use a screwdriverto remove the key lock assembly mounting bracket(C).

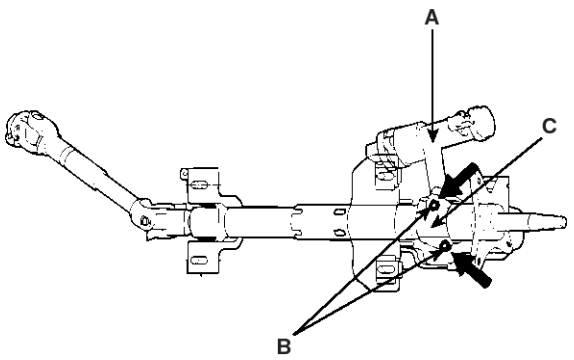

APIE102K

2. Disassemble the key lock assembly(A) from the steering column and shaft assembly(B).

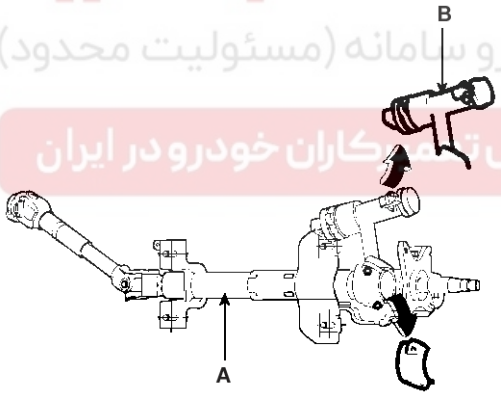

APIE102L

3. Reassembly is the reverse of disassembly.

UNIVERSAL JOINT ASSEMBLY

1. Remove the bolt(C) connecting the universal joint assembly(A) and the steering column and shaft assembly(B).

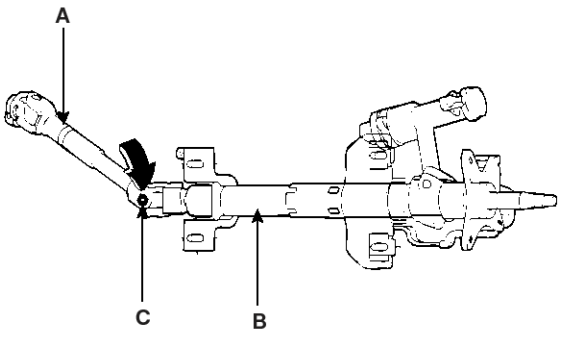

APIE102M

2. Remove the universal joint assembly(B) from the steering column and shaft assembly(A).

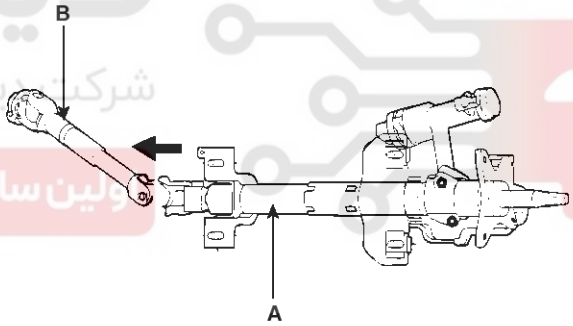

APIE102N

3. Reassembly is the reverse of disassembly.

INSPECTION

1. Check the steering column shaft for damage and deformation.
2. Check connections for play, damage and smooth operation.
3. Check the ball joint bearing for wear and damage.

Hydraulic Power Steering System

Power Steering Gear Box

COMPONENTS

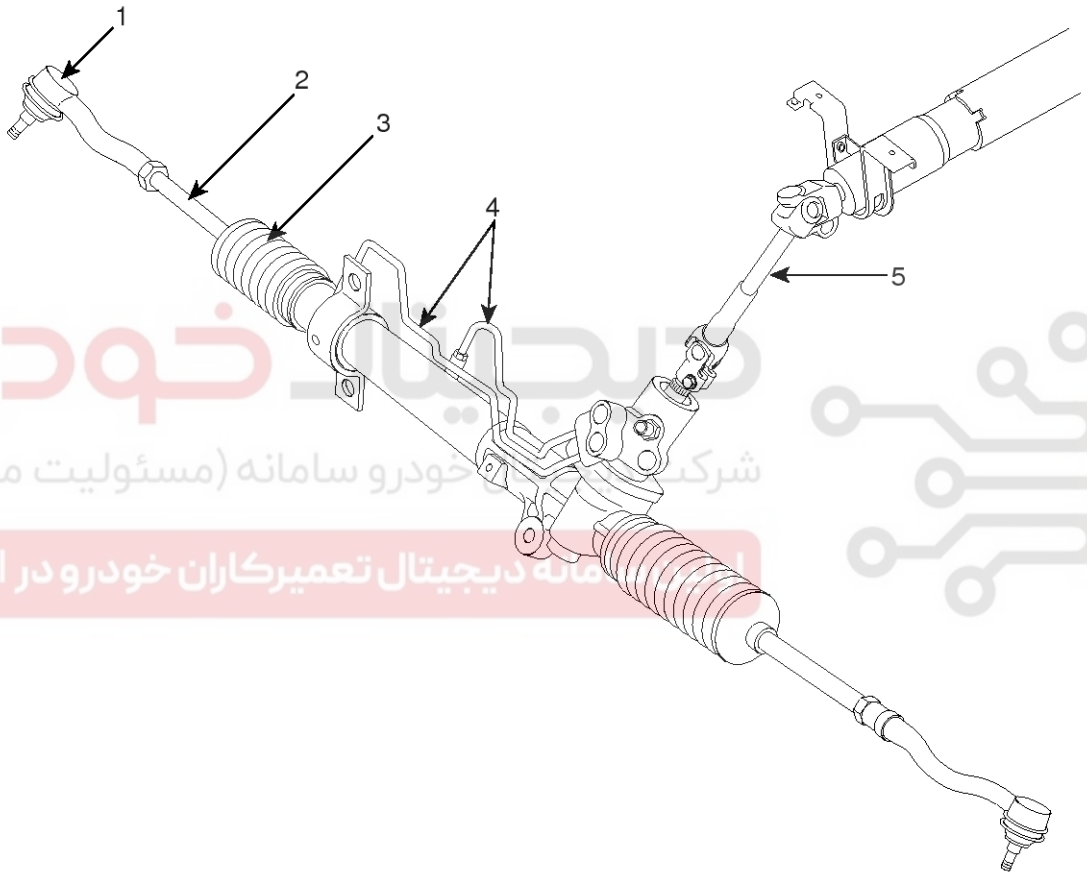

1. Tie rod end assembly
2. Tie rod assembly
3. Bellows
4. Feed tube
5. Joint assembly

LPIE103A

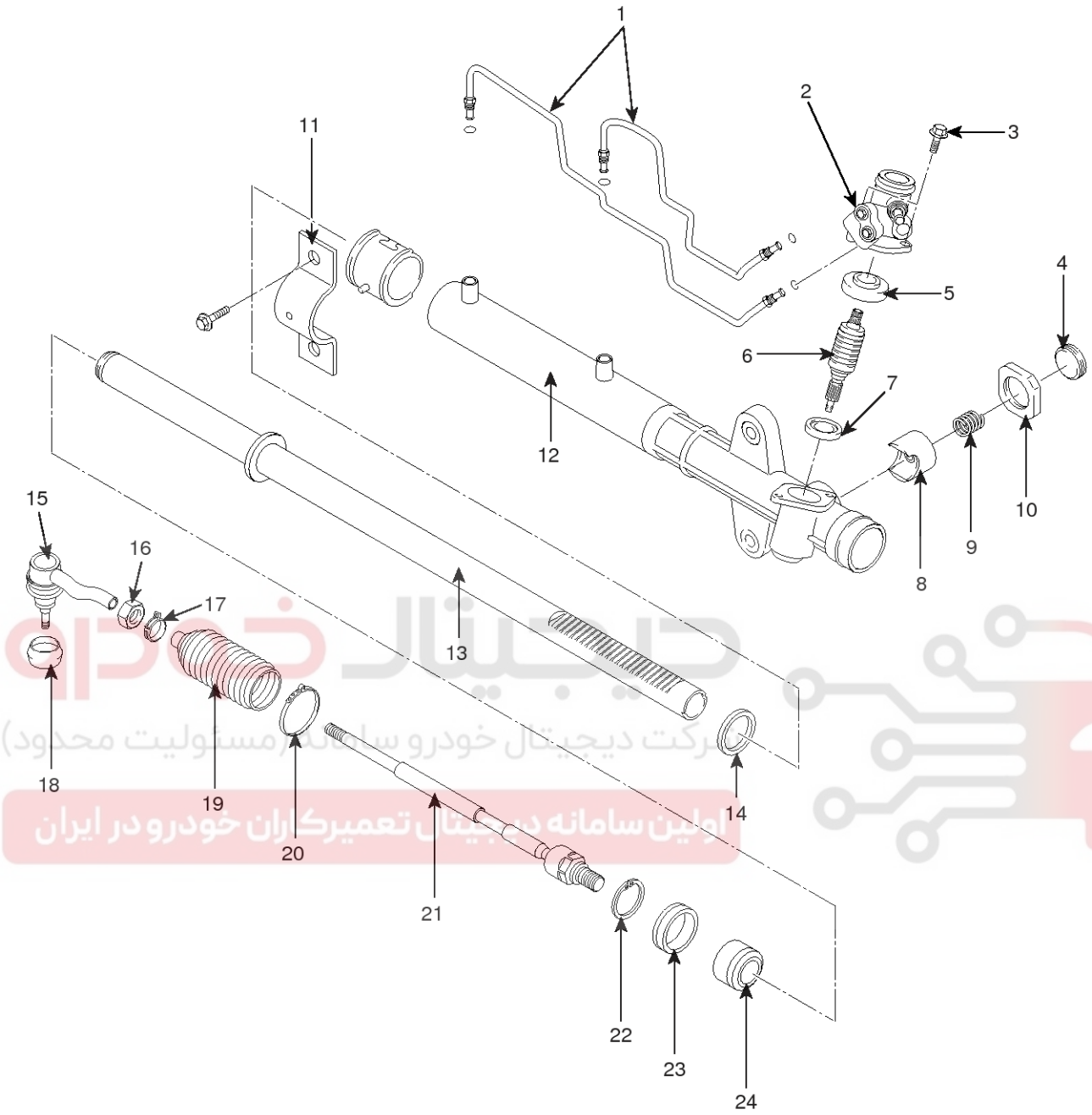

1. Feed tube
2. Valve body housing
3. Bolt
4. Yoke plug
5. Oil seal
6. Pinion valve assembly
7. Oil seal
8. Rack support yoke
9. Rack support spring
10. Lock nut
11. Power steering gear box mounting clamp
12. Rack housing
13. Rack
14. Oil seal
15. Tie rod end
16. Lock nut
17. Bellows clip
18. Dust cover
19. Bellows
20. Bellows bavd
21. Tie rod
22. Circlip
23. Oil seal
24. Rack stopper

LPIE103B

REMOVAL

1. Disconnect the cover fixing clip(A) on the univ ersial joint indoor driver isde, loosen the noise covers(B).

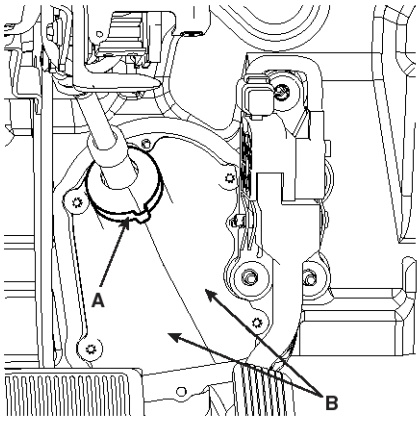

APIE103C

2. Loosen the iniversial joint and the gear box mounting bolt and disconnect the universial joint from the gear box.

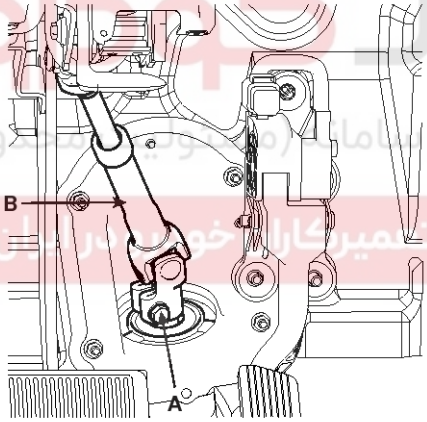

APIE103D

⚠CAUTION
Keep the neutral-range to prevent the damage of the clock spring inner cable when you handlethe steering wheel.

3. Lift up the vehicle.
4. Remove the front tires (RH/LH).
5. Remove the engine under cover.
6. After removing the split pin, disconnect the tie rod(A) from the knuckle(B) by using the special tool (09568-34000).

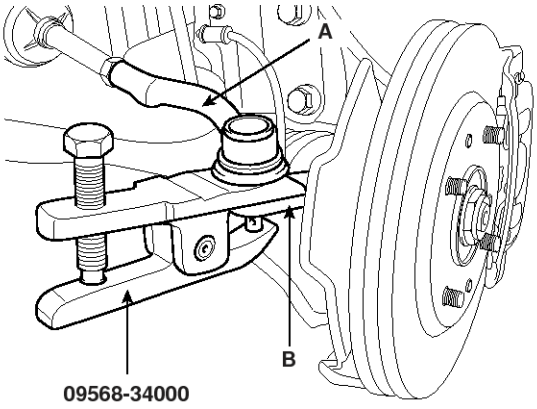

APIE101C

7. Remove the stabilizer link(B) from the strut assembly(A).

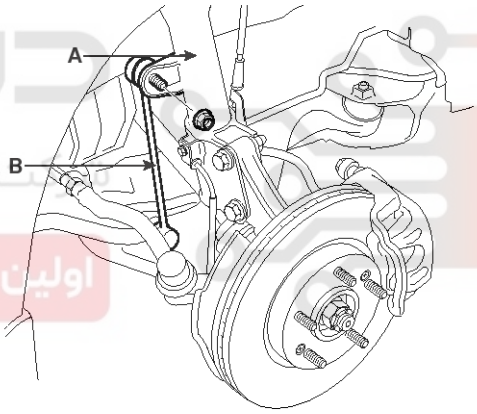

APIE103F

8. Remove the two bolts(A) for lower arm ball joint.

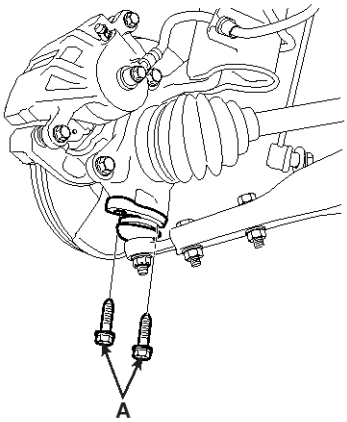

APIE103G

9. Disassemble the propeller shaft(A) to the front muffler assembly(B).

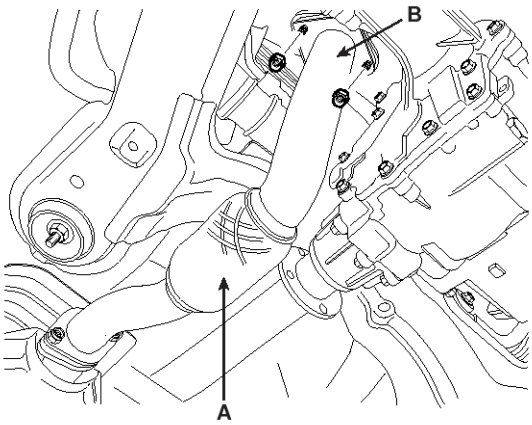

APIE103H

10. Drain oil from the transfer case(A). then remove the rear flange assembly(B).

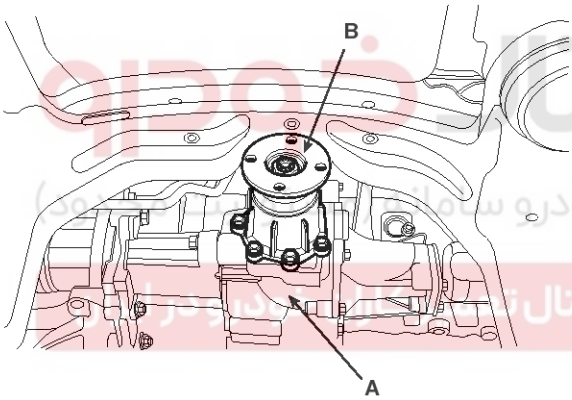

APIE103I

11. Drain power steering oil.
12. Remove the connecting bolt(A) for pressure tubes.

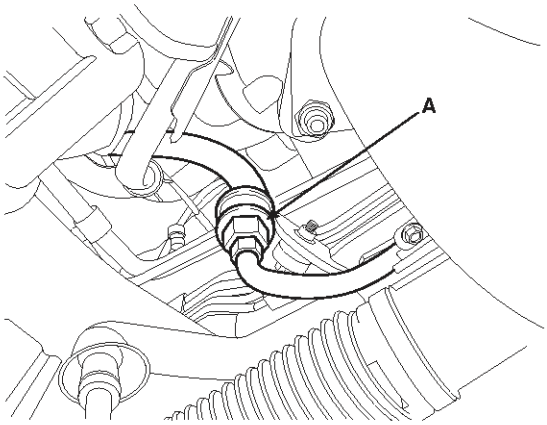

APIE103J

13. Remove two engline mounting bolts(B,C) and six subframe mounting bolts in order to remove the subframe(A).

Tightening torque :
engine mounting bolts
50 ~ 65 Nm (5 ~ 6.5 kgf·m, 37 ~ 47.8 lbf·ft)

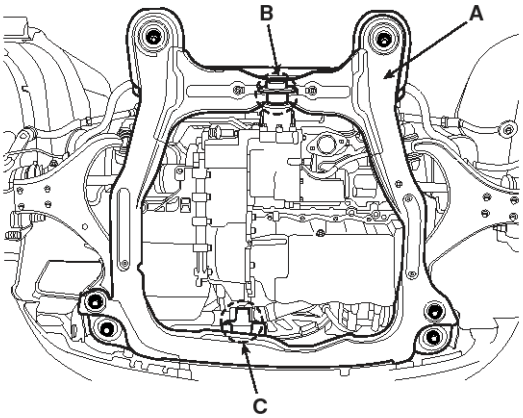

APIE103K

14. Remove the powersteering gearbox(A) after removing four mounting bolts(B) of the powersteering gearbox.

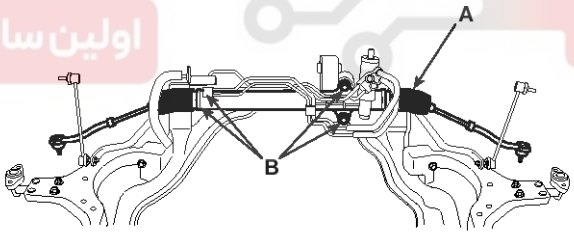

APIE103L

INSTALLATION

1. Installation is the reserve of removal.
2. Add power steering fluid.
3. Air bleed the system.

DISASSEMBLY

1. Remove the tie rod end(A) from the tie rod(B).

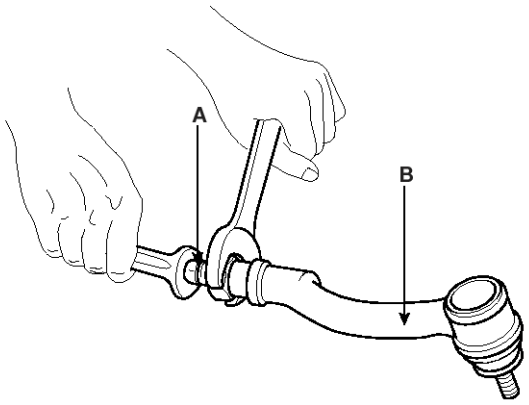

APIE103M

2. After mounting the tie rod end(A) in a vise, remove the dust cover(B) from the ball joint.

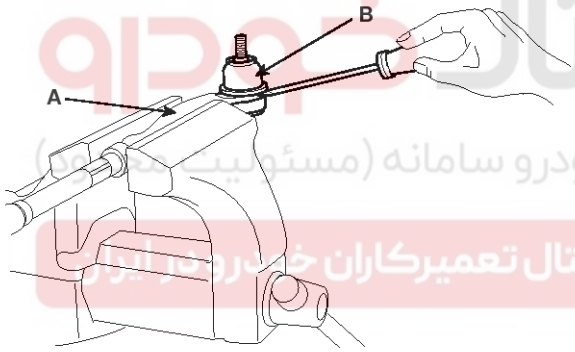

APIE103N

3. Remove the bellows band(A).

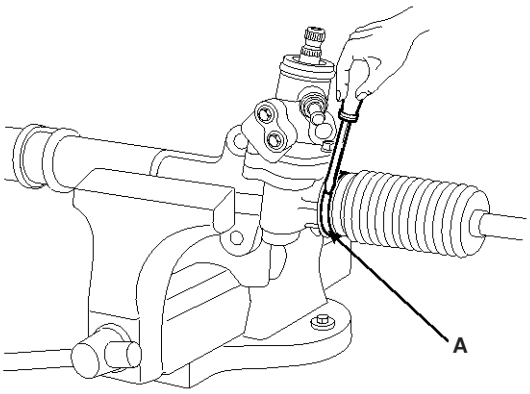

APIE103O

4. Remove the bellows clip(A).

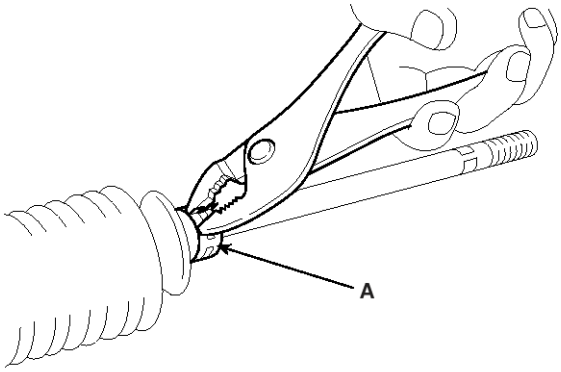

APIE103P

5. Pull the bellows out toward the tie rod.

NOTICE

Check for rust on the rack when the bellows are replaced.

6. Remove the feed tube from the rack housing.
7. While moving the rack slowly, drain the fluid from the rack housing.
8. Unstake the tab washer(C) which fixes the tie rod(A) and rack(B) with a chisel.

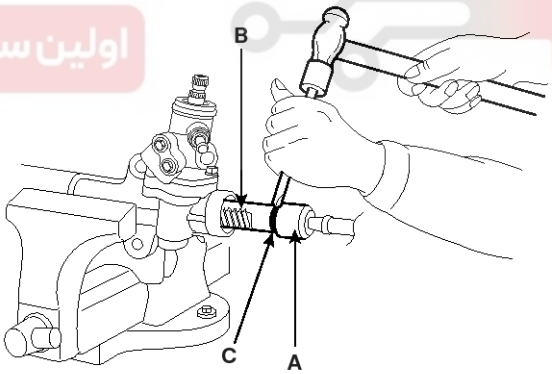

APIE103Q

9. Remove the tie rod(B) from the rack(A).

CAUTION

Remove the tie rod(B) from the rack(A), taking care not to twist the rack.

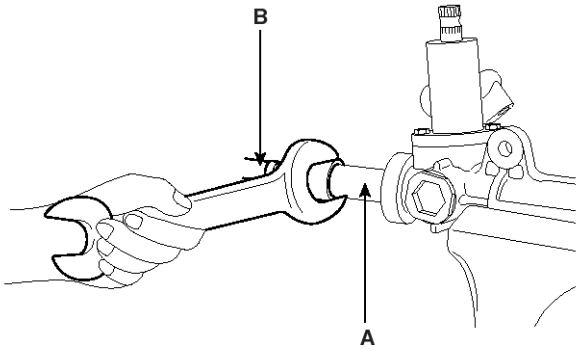

APIE103R

10. Remove the yoke plug locking nut(A), and then remove the yoke plug.

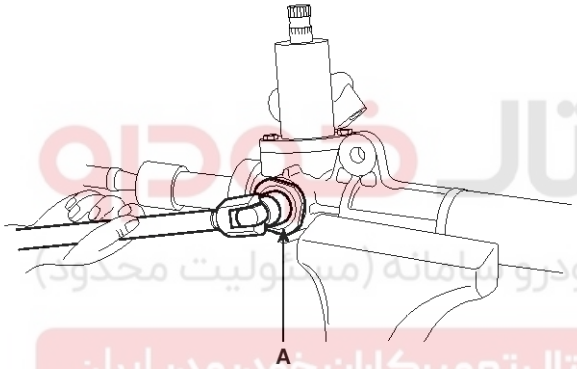

APIE103S

11. Remove the lock nut(A), yoke plug(B), rack support spring(C), rack support yoke(D) and bushing(E) from the gear box.

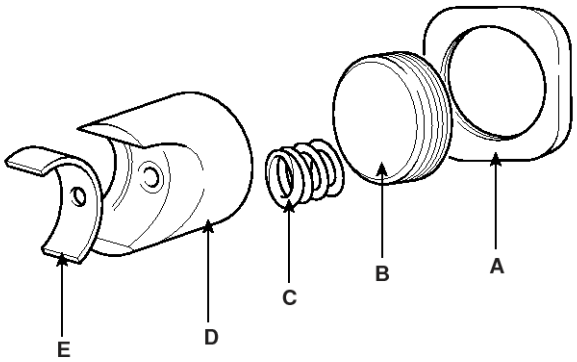

APIE103T

12. Remove the valve body housing(B) by loosening the two bolts(A).

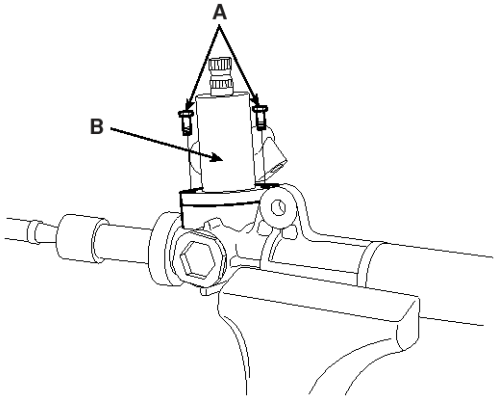

APIE103U

13. Remove the rack bushing and the rack from the rack housing.
14. Remove the O-ring(A) from the rack bushing(B).

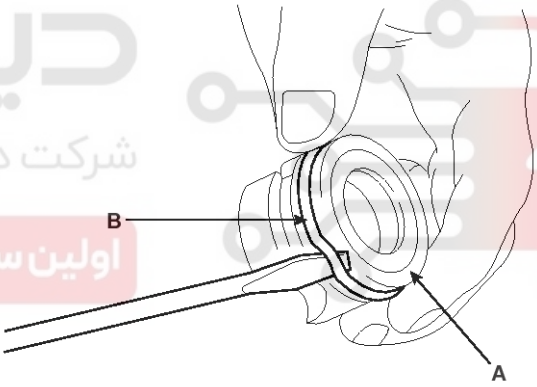

APIE103V

15. Remove the oil seal(B) from the rack bushing(A).

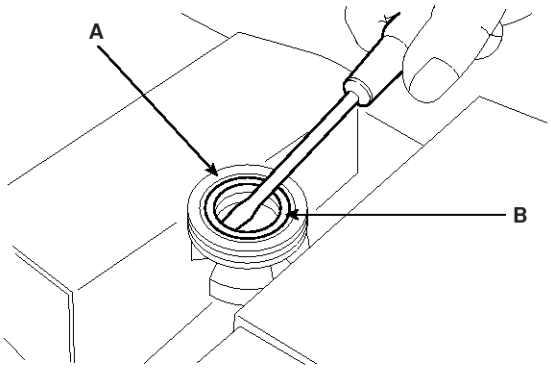

APIE103W

16. Remove the pinion vlave assembly(C) from the valve body housing(B) with a soft hammer(A).

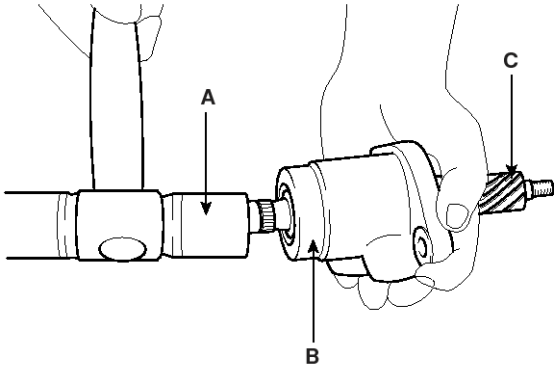

APIE103X

17. Using the special tool, remove the oil seal and ball bearing from the valve body housing.
18. Remove the oil seal and O-ring from the rack housing.

⚠CAUTION
Be careful not to damage the pinion valve cylinder inside of the rack housing.

19. Using the special tool(06573-21200, 09555-21000), remove the oil seal(B) from the rack housing(A).

⚠CAUTION
Be careful not to damage the rack cylinder inside of the rack housing.

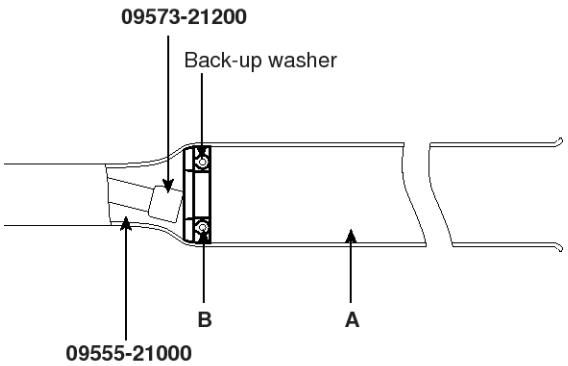

LPIE103Y

INSPECTION AND ADJUSTMENT BEFORE DISASSEMBLY

⚠CAUTION
When mounting the gear box in a vise, let the installation section of it be fixed to the jaws. If other section is fixed the gear box may be damaged.

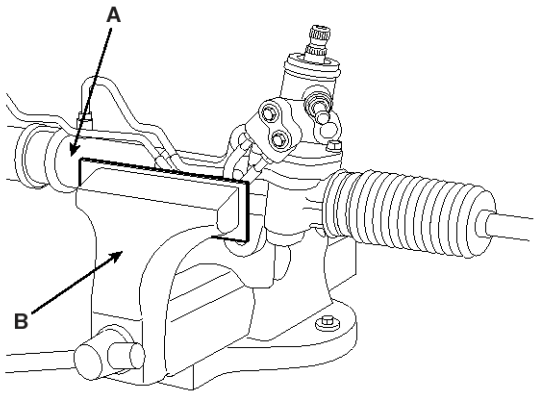

APIE104M

TOTAL PINION PRELOAD

1. Rotate the pinion gear for approximately 4 to 6 seconds for one rotation to measure the total pinion preload.

Standard value :
Total pinion preload :
0.6 ~ 1.3 Nm (0.06 ~ 0.13 kgf·m, 0.4 ~ 1 lbf·ft)

NOTICE
Measure the pinion preload through the entire stroke of the rack.

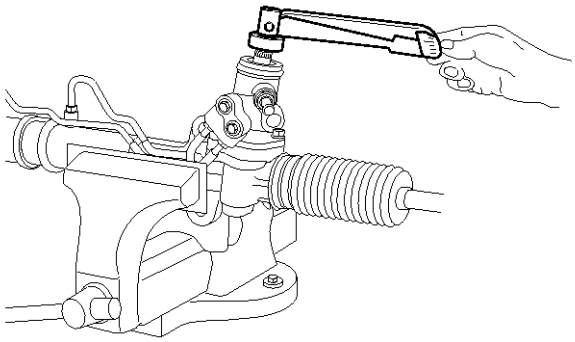

APIE104N

2. If the measured value is out of specifications, first adjust the yoke plug, then recheck the total pinion preload.

3. If you adjust the yoke plug but do not obtain the total pinion preload, check or replace the yoke plug components

TIE ROD SWING RESISTANCE

1. Rotate the tie rod severely ten times.
2. Measure the tie rod(A) swing resistance with a spring scale(B).

Standard value :
Total rod swing resistance :
8 ~ 22 N (1.9~4.6 lb) [2 ~ 5 Nm (0.2 ~ 0.5 kgf·m, 17 ~ 43 lbf·in)]

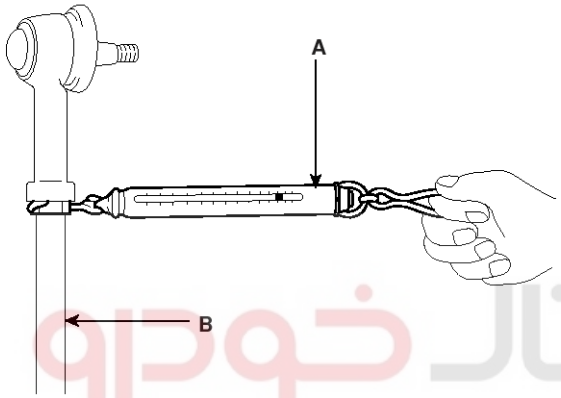

APIE104O

3. If the measured value exceeds the standard value, replace the tie rod as sembly.

⚠CAUTION
Even if the measured value is below the standard value, the tie rod that swings smoothly without excessive play may be used. If the measured value is below 4.3 N (0.9 lb) [100 Ncm (8.7 lb.in.)], replace the tie rod.

BELLOWS INSPECTION

1. Inspect the bellows for damage or deterioration.
2. Make sure the bellows are secured in the correct position.
3. If the bellows are defective, replace them with new ones.

REASSEMBLY

1. Apply the specified fluid to the entire surface of the rack oil seal.

Recommended fluid : PSF-3

2. Install the oil seal(A) to the specified position in the rack housing.

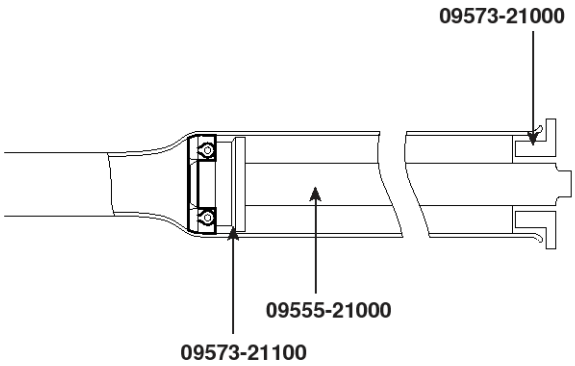

APIE104B

3. Apply the specified fluid to the entire surface of the rack bushing oil seal .

Recommended fluid : PSF-3

4. Install the oil seal(B) in the rack bushing(A).

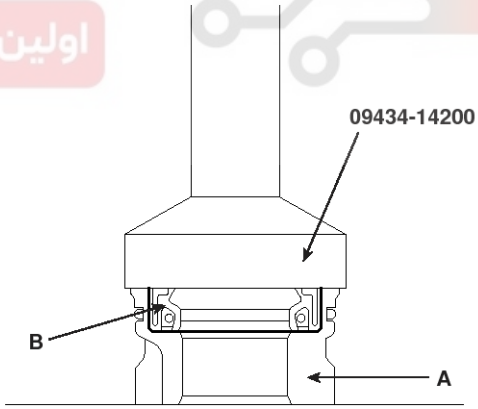

APIE104C

5. Apply the specified fluid to the entire surface of the O-ring and install it in the rack bushing.
6. Apply the specified grease to the rack teeth.

Recommended grease :
Multipurpose grease SAE J310, NLGI No.2

NOTICE
Do not plug the vent hole(A) in the rack with grease.

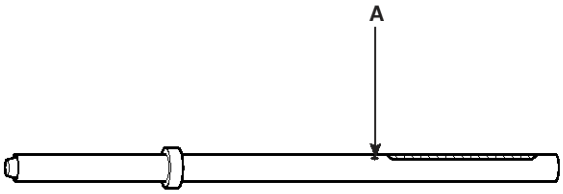

APIE104D

7. Insert the rack into the rack housing and install the rack bushing and rack stopper.
8. Install the oil seal and the ball bearing in the valve body.
9. After appling the specified fluid and grease to the pinion valve assembly(A), install it in the rack housing assembly.

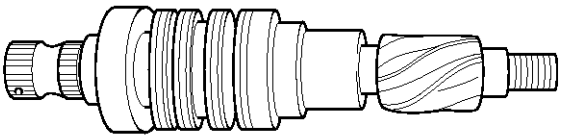

APIE104E

10. After applying the specified fluid to the oil seal, install it in the rack housing, and fix the valve body assembly(B) and O-ring in the gear box(A).

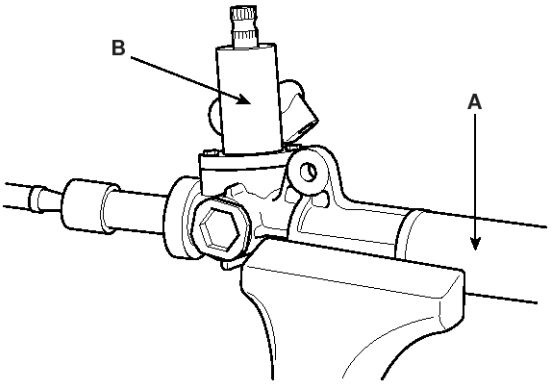

APIE104F

11. Install the tab washer and the tie rod and stake the tab washer(A) end at two points over the tie rod.

NOTICE
1. *Align the tab washer pawls with the rack grooves.*
2. *Always use a new tab washer.*

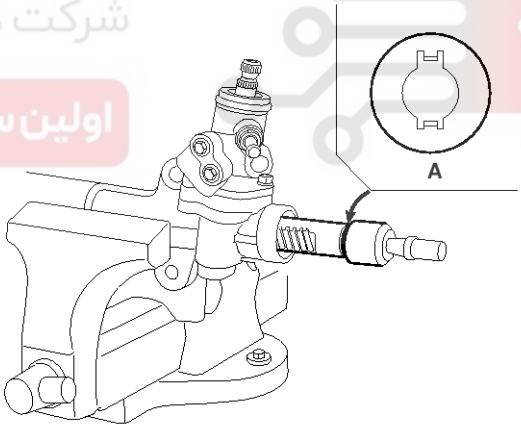

APIE104G

12. Install the bushing(A), rack support yoke(B), rack support spring(C), lock nut(E) and yoke plug(D) in the order shown in the illustration. Apply semi-drying sealantto to the threaded section of the yoke plu g before installation.

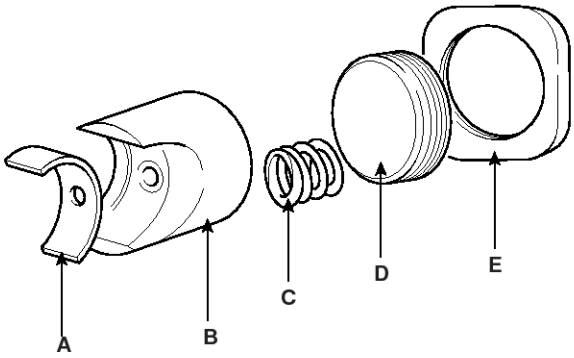

APIE104H

13. With the rack placed in the center position, attach the yoke plug to the rack housing. Tighten the yoke plug to 15 Nm (1.5 kgf·m, 11 lbf·ft). Loosen the yoke plug approximately from 30° to60° and tighten the locking nut to the specified torque.

Tightening torque :
50 ~ 70 Nm (5 ~ 7 kgf·m, 37 ~ 52 lbf·ft)

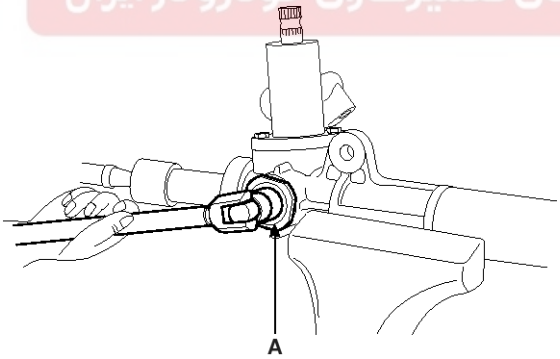

APIE104I

14. Tighten the feed tube to the specified torque and install the mounting rubber using adhesive.

15. Apply the specified grease to the bellows mounting position (fitting groove) of the tie rod.

: Silicone grease

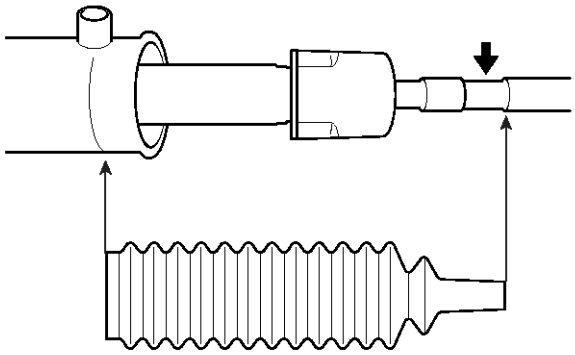

APIE104J

16. Install the new attaching band to the bellows.

NOTICE
When the bellows are installed, a new band must be used.

17. Install the bellows in position, taking care not to twist it.

18. Fill the dust cover inner side and lip with the specified grease, and fix the dust cover in position with the clip ring attached in the grooveof the tie rod end.

Recommended greas :
A : POLY LUB GLY 801K or equivalent
B : SHOWA SUNLIGHT MB2 or equivalent
Dust cover inner side and lip : THREE BOND

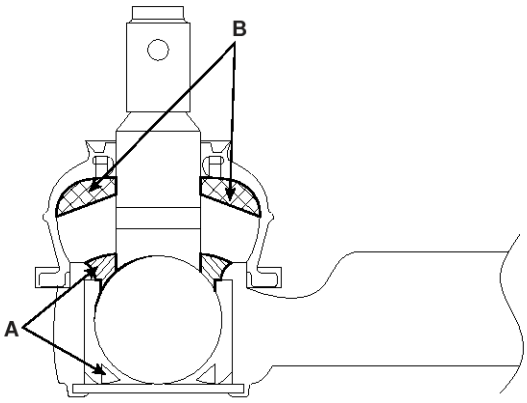

APIE104K

19. Install the tie rods so that the length of the left and right tie rods equals the standard value.

Standard value :
Tie rod free length : 112.2 mm

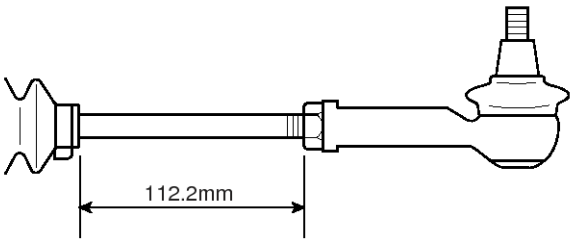

APIE104L

20. Check for total pinion preload.

Total pinion preload :
0.6 ~ 1.3 Nm (0.06 ~ 0.13 kgf·m, 5.2 ~ 11.3 lbf·ft)

INSPECTION AND ADJUSTMENT BEFORE DISASSEMBLY

CAUTION
When mounting the gear box in a vise, let the installation section of it be fixed to the jaws. If other section is fixed the gear box may be damaged.

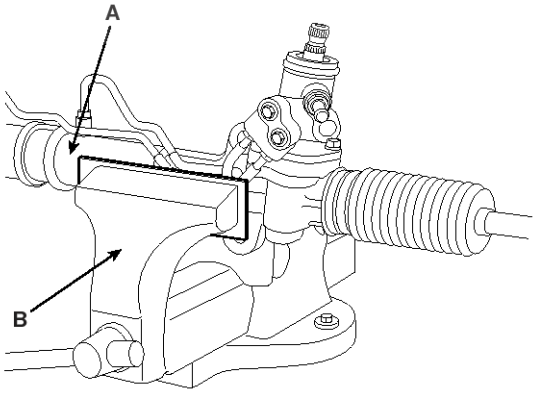

APIE104M

TOTAL PINION PRELOAD

1. Rotate the pinion gear for approximately 4 to 6 seconds for one rotation to measure the total pinion preload.

Standard value :
Total pinion preload :
0.6 ~ 1.3 Nm (0.06 ~ 0.13 kgf·m, 0.4 ~ 1 lbf·ft)

NOTICE
Measure the pinion preload through the entire stroke of the rack.

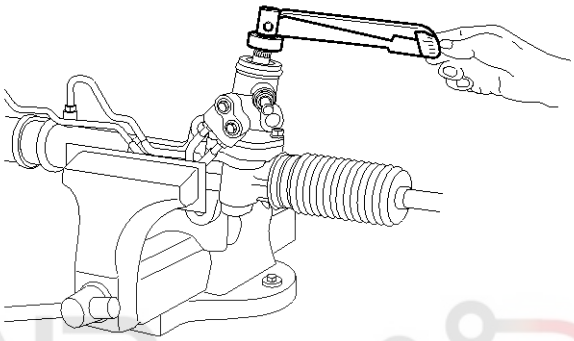

APIE104N

2. If the measured value is out of specifications, first adjust the yoke plug, then recheck the total pinion preload.
3. If you adjust the yoke plug but do not obtain the total pinion preload, check or replace the yoke plug components

TIE ROD SWING RESISTANCE

1. Rotate the tie rod severely ten times.
2. Measure the tie rod(A) swing resistance with a spring scale(B).

Standard value :
Total rod swing resistance :
8 ~ 22 N (1.9~4.6 lb) [2 ~ 5 Nm (0.2 ~ 0.5 kgf·m, 17 ~ 43 lbf·in)]

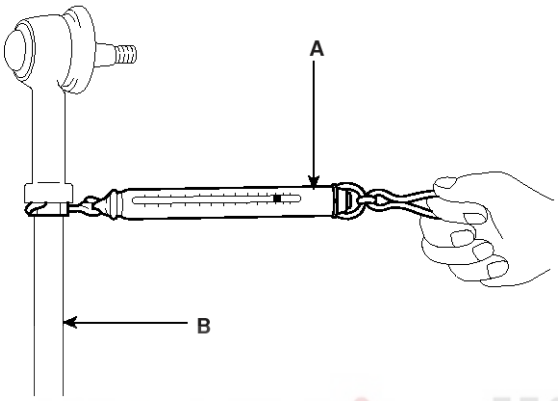

APIE104O

3. If the measured value exceeds the standard value, replace the tie rod as sembly.

⚠CAUTION
Even if the measured value is below the standard value, the tie rod that swings smoothly without excessive play may be used. If the measured value is below 4.3 N (0.9 lb) [100 Ncm (8.7 lb.in.)], replace the tie rod.

BELLOWS INSPECTION

1. Inspect the bellows for damage or deterioration.
2. Make sure the bellows are secured in the correct position.
3. If the bellows are defective, replace them with new ones.

Power Steering Hoses

COMPONENTS

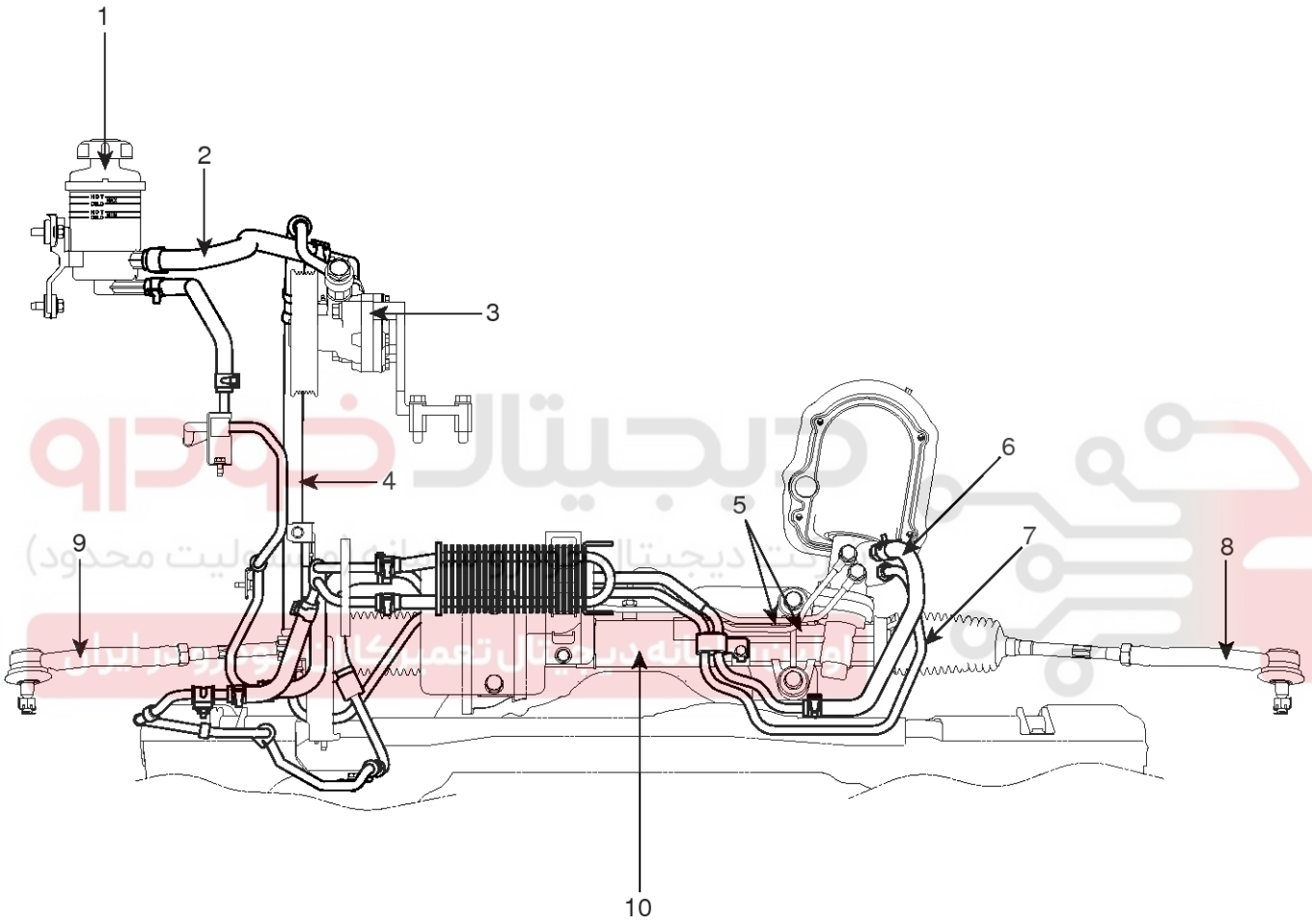

1. Power steering oil reservoir
2. Suction hose
3. Power steering gear box assembly
4. Pressure hose and tube assembly
5. Feed tube
6. Return hose
7. Pressure tube
8. Tie rod end
9. Tie rod end
10. Power steering gear box assembly

LPIE105A

REMOVAL

1. Drain the power steering oil.
2. Remove both the pressure tube fitting(A) and the return hose clamp(B) from the gearbox, after lifting the vehicle.

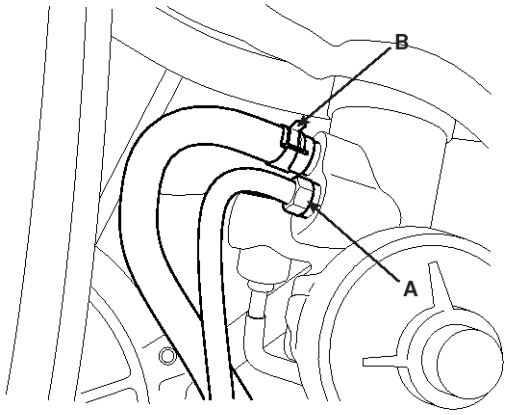

APIE105B

3. Remove the pressure tube connecting bolt(A) and the pressure hose mounting bolt(B), then remove the return hose clamp(C).

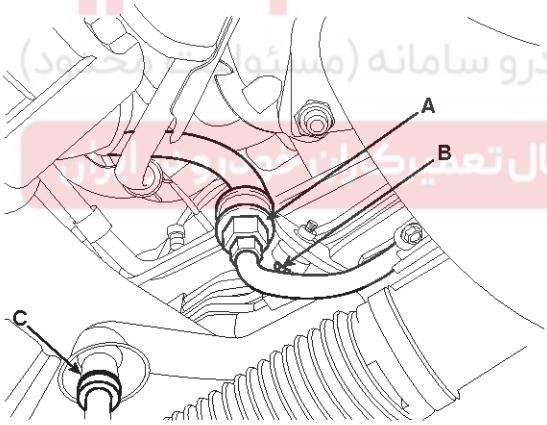

APIE105C

4. Remove the pressure tube mounting bolt(A) and the return tube mounting bolt(B).

Tightening torque :
4 ~ 6 Nm (0.4 ~ 0.6 kgf·m, 3.0 ~ 4.0 lbf·ft)

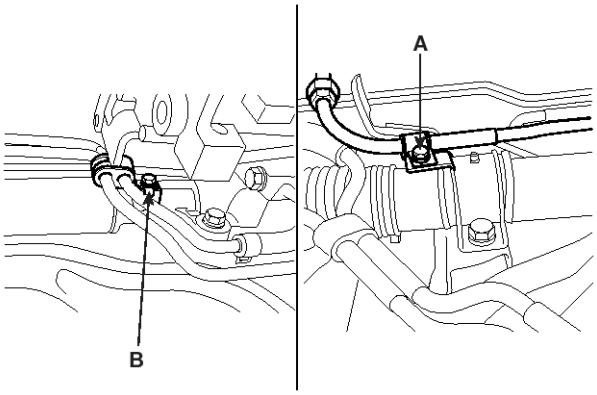

APIE105D

5. Remove the pressure tube bolt(A) and clamp(B), after lowering the vehicle.

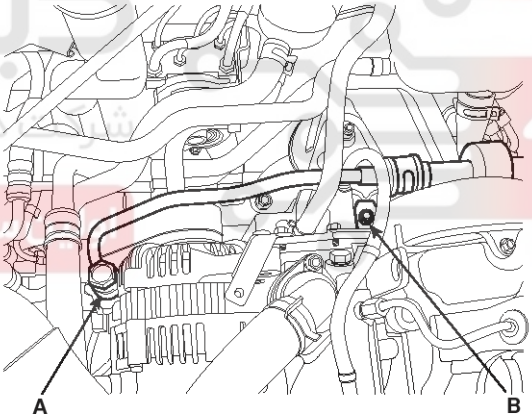

APIE105E

6. Remove the pressure tube(A) and the return tube(B).

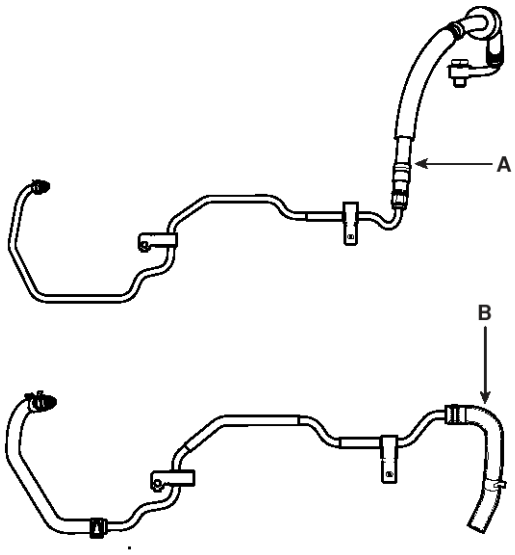

APIE105F

INSTALLATION

1. Installation is the reverse of removal.
2. Add power steering fluid.

CAUTION

- **While installing the tube and hose assembly, be sure to align white marks(A) on each fitting.**

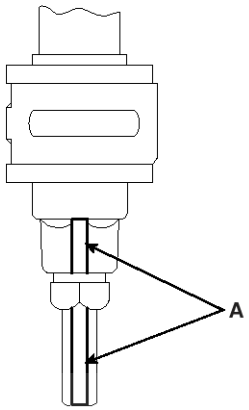

APIE105G

- **Install the pressure hose and tube so that they are not twisted and they do not come in contact with any other parts.**
- **After installation, air bleed the system.**

Power Steering Oil Pump

COMPONENTS

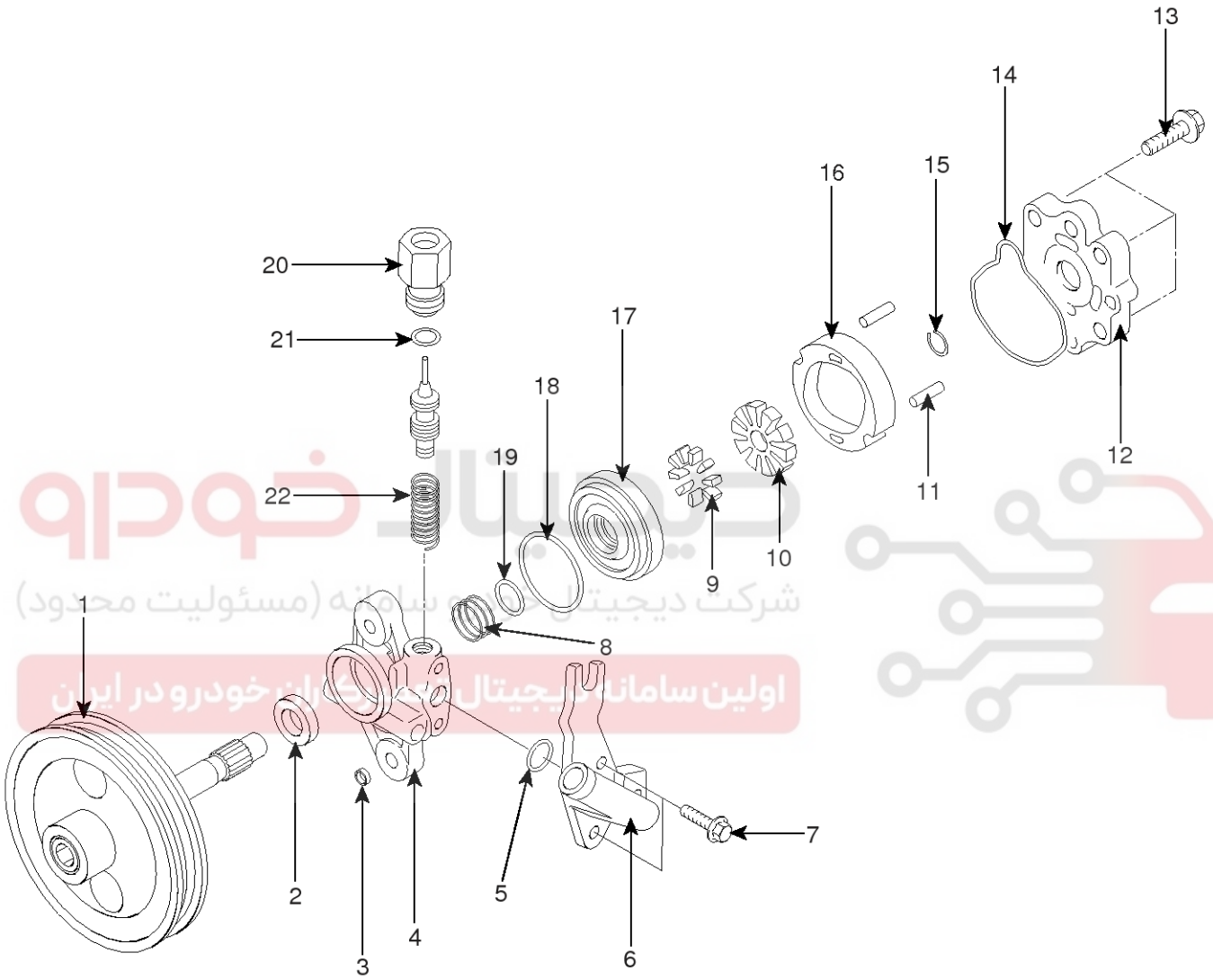

1. Pulley & driveshaft assembly
2. Oil seal
3. Bush
4. Front housing
5. O-ring
6. Suction pipe
7. Mounting bolt
8. Side plate spring
9. Vane
10. Rotor
11. Cam ring
12. Oil pump cover assembly
13. Mounting bolt
14. O-ring
15. Bush
16. Cam ring
17. Oil pump side plate
18. O-ring (Outer)
19. O-ring (Inner)
20. Connector
21. O-ring
22. Spring

LPIE106A

REMOVAL

1. Remove the pressure hose(A) from the oil pump, then remove the suction hose(B) in order to drain the oil.

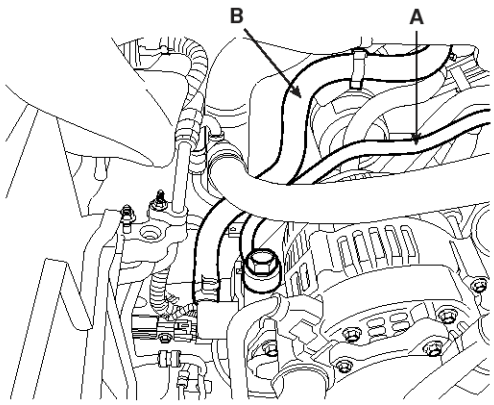

APIE106B

2. Disconnect the negative (-) terminal(A) from the battery.

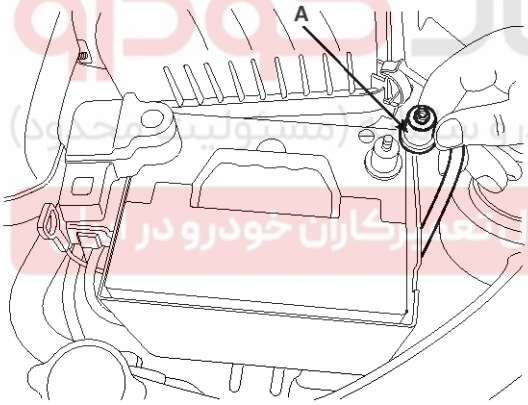

APIE106C

3. Remove the drive belt.

4. Remove both the alternator connector(A) and 'B' terminal cable(B), then remove the vaccum hose(D) and the oil tube(D).

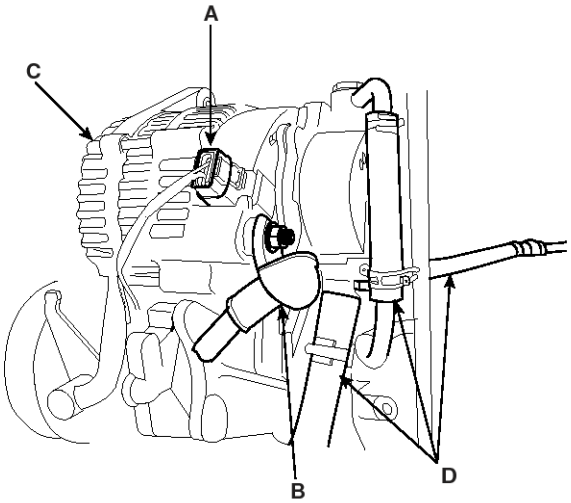

APIE106D

5. Remove the alternator(C) by removing the bolt(B), after removing the bolt(A).

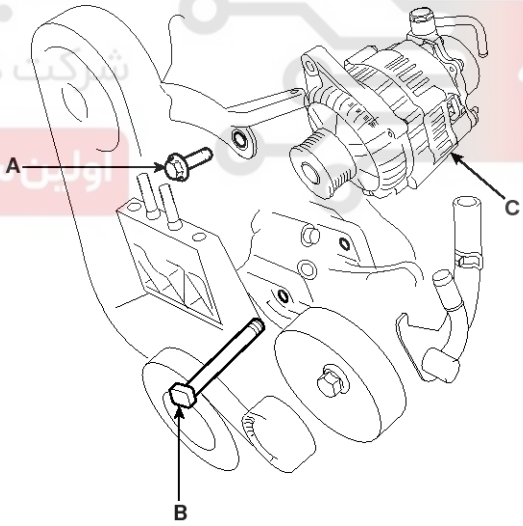

APIE106E

6. Loosen the power steering oil pump mounting bolt and the tension adjusting bolt, and then remove the steering oil pump assembly(A).

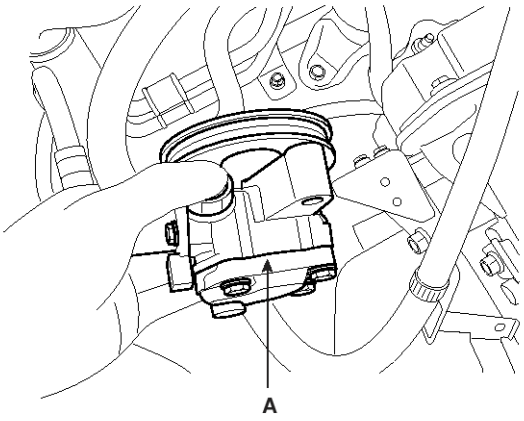

APIE106F

INSTALLATION

1. Install the oil pump(A) to the oil pump bracket.

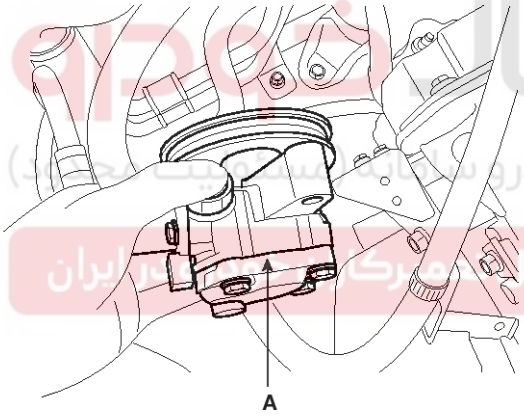

APIE106N

Tightening torque :

2.0(D-ENG) : 17 ~ 16 Nm (1.7 ~ 2.6 kgf·m, 12.3 ~ 18.8 lbf·ft)

2.0(I4), 2.7(V6) : 35 ~ 50 Nm (3.5 ~ 5 kgf·m, 25.8 ~ 37 lbf·ft)

2. Install the alternator(C) with the two bolts(A,B).

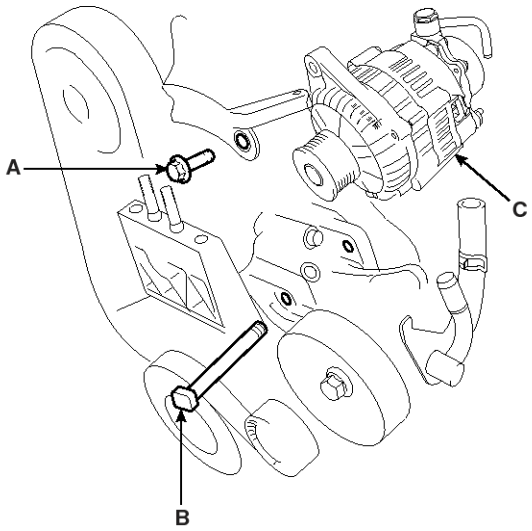

APIE106O

3. Install the alternator connector(A), the 'B' terminal cable(B), the vacuum hose(D), and the oil tube(D).

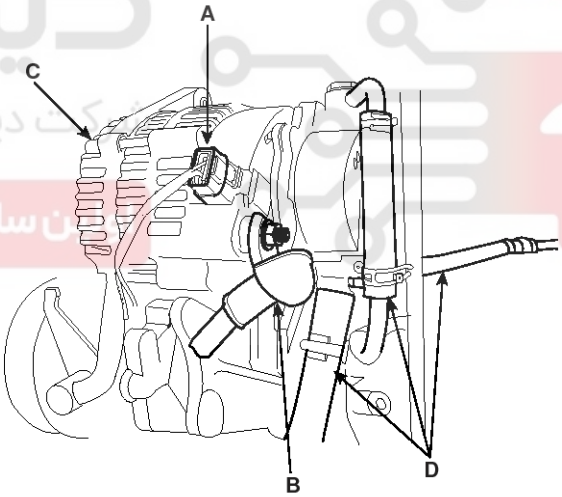

APIE106P

4. Install both the pressure hose(A) and the suction hose to the oil pump.

Tightening torque :
65 ~ 75 Nm (6.5 ~ 7.5 kgf·m, 47.9 ~ 54.2 lbf·ft)

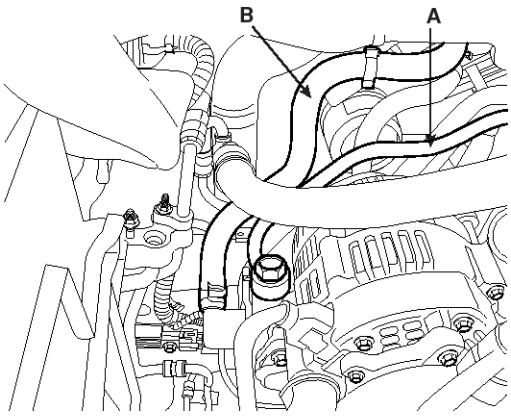

APIE106Q

5. Install the drive belt to the pulley.
6. Connect the negative(-) cable to the battery.

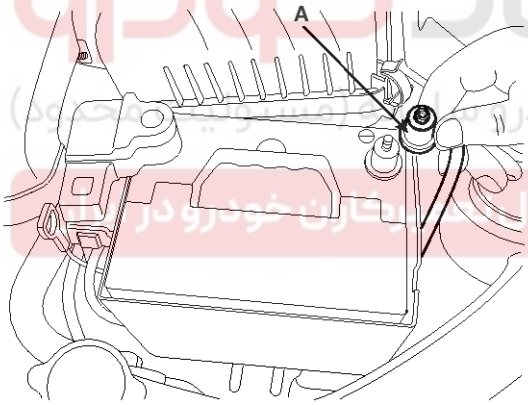

APIE106C

7. Fill an appropriate amount of the powersteering oil(PSF-3).
8. Air bleed the system.
9. Inspect the oil pump pressure.

DISASSEMBLY

1. Remove two two bolts(A) from the oil pump body, and then remove the suction pipe(B) and O-ring(C).

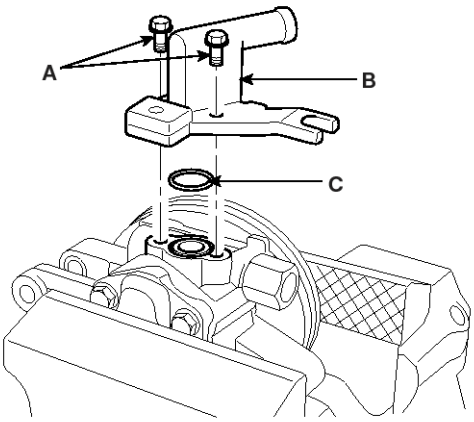

APIE106G

2. Loosen the four bolts and remove the oil pump cover assemb ly.
3. Remove the cam ring.
4. Remove the rotor and vanes.
5. Remove the oil pump side plate.

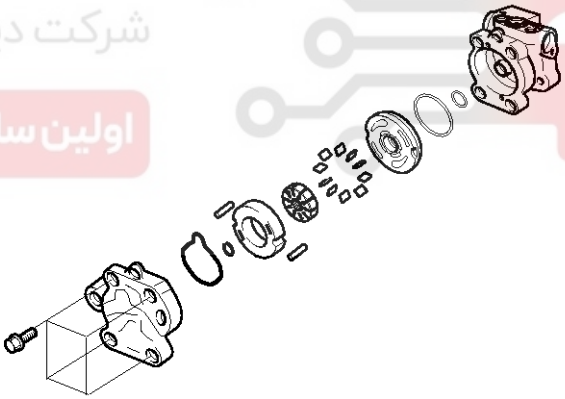

APIE106H

6. Remove the inner O-ring(A) and outer O-ring(B).

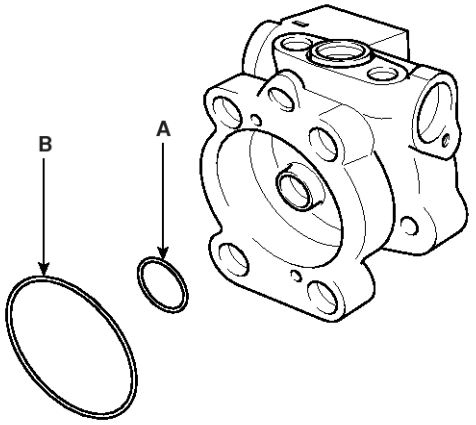

APIE106I

7. Remove the snap ring and take out the pulley and the drive shaft assembly(A).

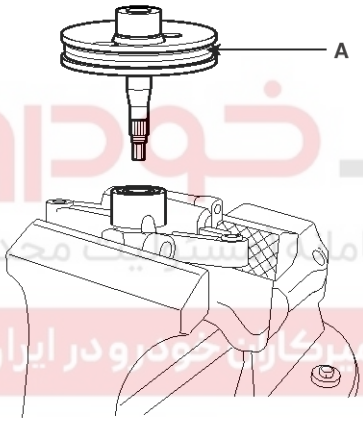

APIE106J

8. Remove the oil seal(A) from the oil pump body.

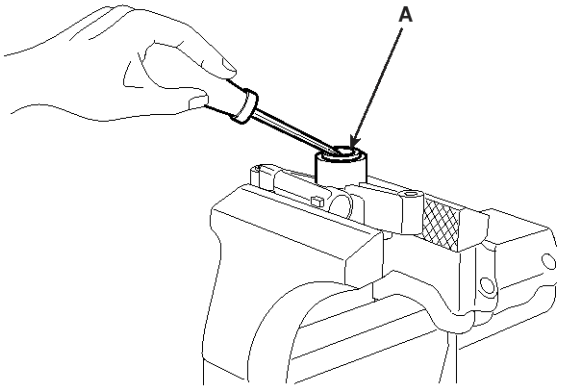

APIE106K

9. Remove the connector from the oil pump body, and take out the flow control valve and the flow control spring.

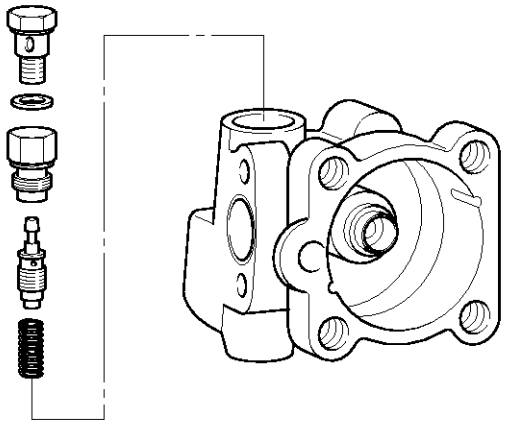

APIE106L

INSPECTION

1. Check the free length of the flow control spring.

Free length of the flow control spring : 36.5mm

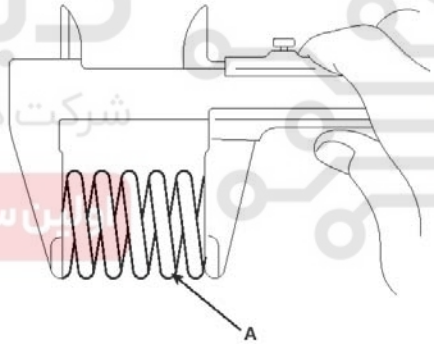

APIE106M

2. Check that the flow control valve is not bent.
3. Check the shaft for wear and damage.
4. Check the V-belt for wear and deterioration.
5. Check the grooves of the rotor and vanes for stratified abrasion.
6. Check the contact surface of the cam ring and vanes for stratified abrasion.
7. Check vanes for damage.
8. Check that there is no striped wear in the side plate or contacting part between the shaft and the pump cover surface.

REASSEMBLY

1. Install the flow control spring, the flow control valve and the connector into the pump body.

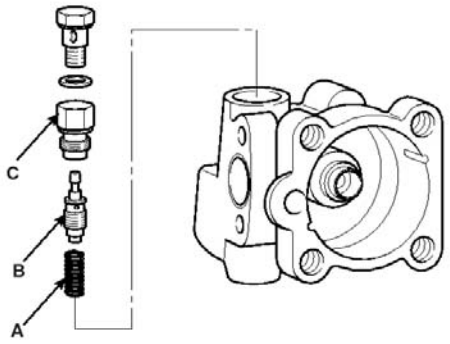

APIE106S

2. Install the oil seal in the pump body by using the special tool(09222-32100).

APIE106T

3. Install the pump pulley(A).

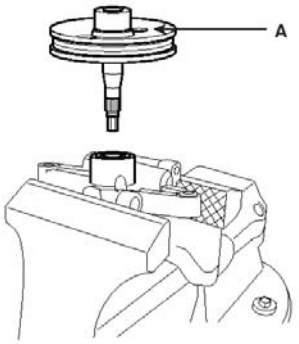

APIE106U

4. Assengle the inner O-ring and the outer O-ring and install the site plate(A).

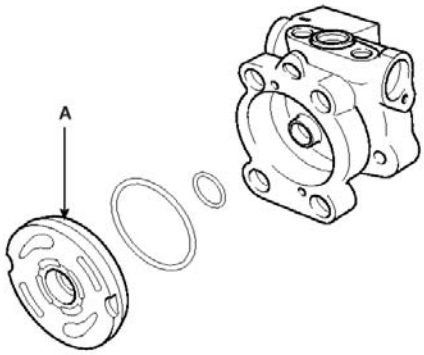

APIE106V

5. Install the cam ring attending to the groove and the direction of the front housing.

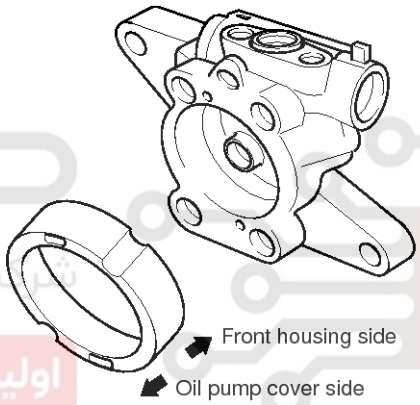

LPIE106W

6. Install the rotor.
7. Install vanes(A) to the rotor(B).

⚠CAUTION
Be sure to place vanes with a round side out.

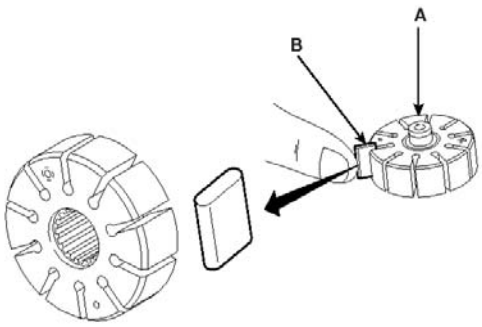

APIE106X

8. Install the O-ring and the oil pump cover assembly.
9. Install the suction pipe(A) and O-ring.

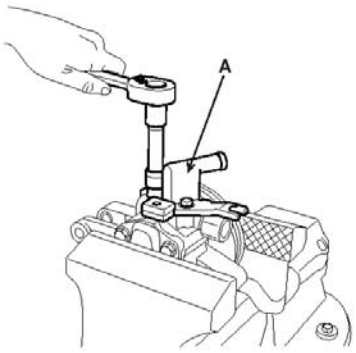

APIE106Y